water supply and drain connection kit

linea mini (LM), gs3, linea micra & linea mini (MI)

la marzocco

handmade in florence

linea mini (LM), gs3, linea micra & linea mini (MI)

Water Supply Connection V3.0 - 03/2024

MAN.212.1

la marzocco

handmade in florence

Chapters

1. Water Supply Connection Assembly linea mini **(LM)** page 3
2. Water Supply Connection Assembly gs3 page 4
3. Water Supply Connection Assembly linea micra page 5
4. Water Supply Connection Assembly linea mini **(MI)** page 7
5. Hole on the Counter linea mini **(LM)** page 8
6. Hole on the Counter gs3 page 9
7. Hole on the Counter linea micra page 10
8. Hole on the Counter linea mini **(MI)** page 11
9. Water Supply Connection Instructions linea mini**(LM)** page 12
10. Water Supply Connection Instructions gs3 page 19
11. Water Supply Connection Instructions linea micra page 23
12. Water Supply Connection Instructions linea mini **(MI)** page 32

La Marzocco S.r.l.

Via La Torre 14/H
Località La Torre
50038 Scarperia e San Piero
(Florence) - ITALY

www.lamarzocco.com
info@lamarzocco.com

T: +39 055 849 191
F: +39 055 849 1990

La Marzocco USA

1553 NW Ballard Way
Seattle, WA 99223 USA

www.lamarzoccousa.com
info.usa@lamarzocco.com
206.706.9104

home.lamarzoccousa.com
home.usa@lamarzocco.com
206.258.2532

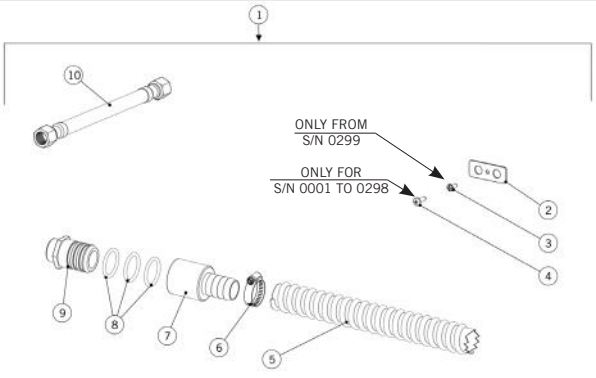

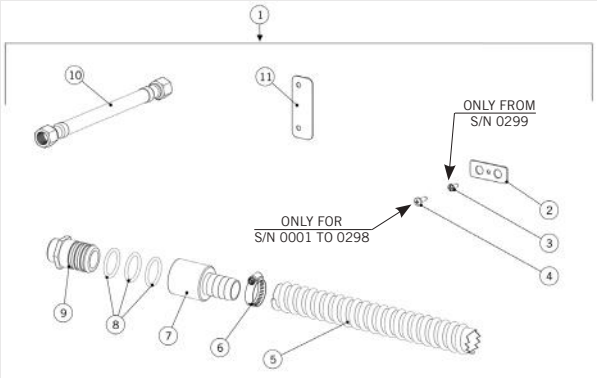

1	911	PLUMBING CONNECTION KIT LINEA MINI (LM) CE
2	C.1.223	CONTACT BY PASS PLATE
3	VITE3X8	3X8 S/S SCREW
4	I.1.062	VITE AUT 3.5X13 TC TCR INOX
5	L308	CLEAR ARMOURED DRAIN HOSE
6	L312	HOSE CLAMP
7	F.8.003	HOSE CONNECTOR QUICK CONNECTION
8	H.1.010.01	ORING 3087 (2-118) EPDM 70 SHA
9	F.8.002	DISCHARGE FITTING QUICK CONNECTION
10	L325	150CM S/S BRAIDED HOSE, G3/8-G1/4 GS3
Item	**Part number**	**Description**

1	912	PLUMBING CONNECTION KIT LINEA MINI (LM) ETL *
2	C.1.223	CONTACT BY PASS PLATE
3	VITE3X8	3X8 S/S SCREW
4	I.1.062	VITE AUT 3.5X13 TC TCR INOX
5	L308	CLEAR ARMOURED DRAIN HOSE
6	L312	HOSE CLAMP
7	F.8.003	HOSE CONNECTOR QUICK CONNECTION
8	H.1.010.01	ORING 3087 (2-118) EPDM 70 SHA
9	F.8.002	DISCHARGE FITTING QUICK CONNECTION
10	L326	150CM S/S BR.HOSE, 3/8” COMPR.-G1/4
11	C.1.440	BRACKET BASE LINEA MINI WATER CONNECTION
Item	**Part number**	**Description**

* This kit is for North America only

2. Water Supply Connection Assembly gs3

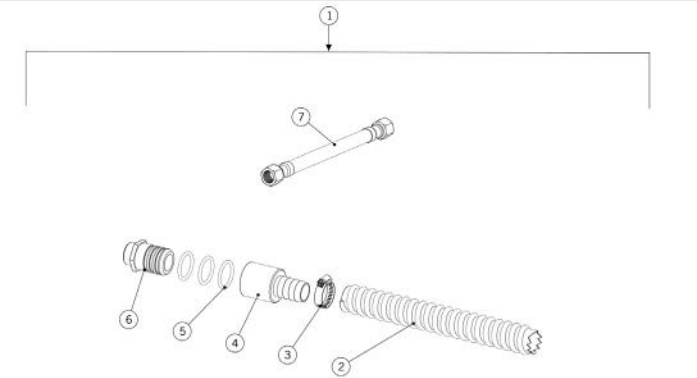

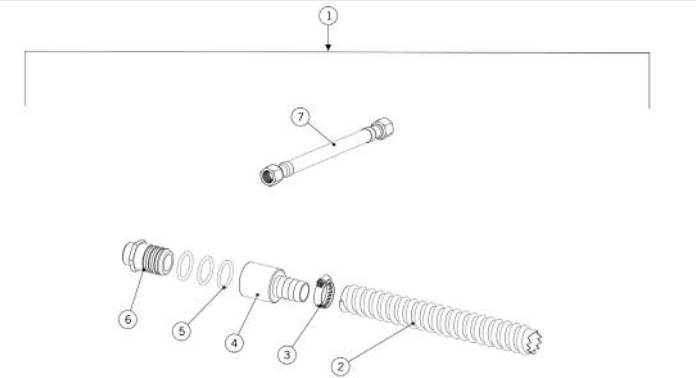

1	913	PLUMBING CONNECTION KIT GS3 CE
2	L308	CLEAR ARMOURED DRAIN HOSE
3	L312	HOSE CLAMP
4	F.8.003	HOSE CONNECTOR QUICK CONNECTION
5	H.1.010.01	ORING 3087 (2-118) EPDM 70 SHA
6	F.8.002	DISCHARGE FITTING QUICK CONNECTION
7	L325	150CM S/S BRAIDED HOSE, G3/8-G1/4 GS3
Item	**Part number**	**Description**

1	914	PLUMBING CONNECTION KIT GS3 ETL
2	L308	CLEAR ARMOURED DRAIN HOSE
3	L312	HOSE CLAMP
4	F.8.003	HOSE CONNECTOR QUICK CONNECTION
5	H.1.010.01	ORING 3087 (2-118) EPDM 70 SHA
6	F.8.002	DISCHARGE FITTING QUICK CONNECTION
7	L326	150CM S/S BR.HOSE, 3/8” COMPR.-G1/4
Item	**Part number**	**Description**

* This kit is for North America only

3. Water Supply Connection Assembly linea micra

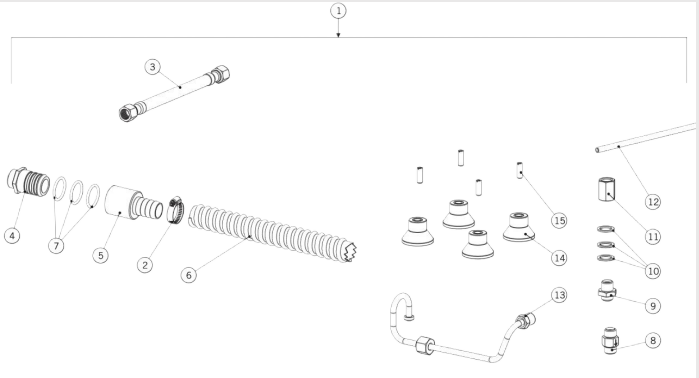

1	1039	PLUMBING CONNECTION KIT LINEA MICRA CE
2	L312	HOSE CLAMP
3	L325	BRAIDED HOSE G3/8F-G1/4F 150CM GS3
4	F.8.002	DISCHARGE FITTING QUICK CONNECTION
5	F.8.003	HOSE CONNECTOR D20 Di16 BRASS
6	L308	CLEAR ARMOURED DRAIN HOSE
7	H.1.010.01	O-RING 2,62x21,89 EPDM 70 ShA
8	B.2.027	CHECK VALVE H27,5
9	A.5.019	NIPPLE G1/4M-G1/4M WR19 H21,5 S/S
10	L100/1A	WASHER 13,5X19X1,5 COPPER
11	A.5.185	FITTING G1/4F-G1/4F WR17 S/S
12	T.3.007	PFA TUBE 6mm - 4mm
13	T.1.322	TUBE PUMP-HOSE MAIN SUPPLY
14	CL41	GS3 FOOT
15	F.8.022	ADAPTOR FOOT MINI FOR MICRA
Item	Part number	Description

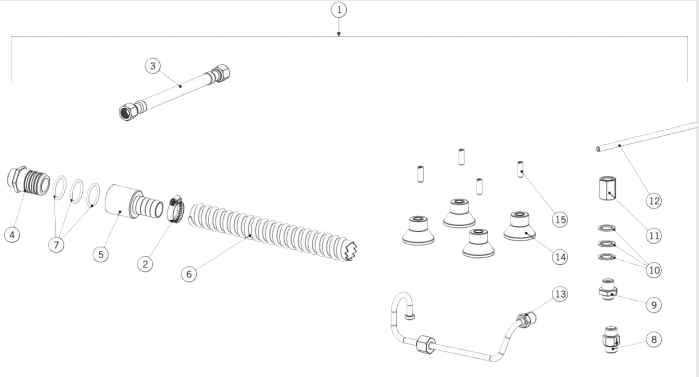

1	1040	PLUMBING CONNECTION KIT LINEA MICRA ETL *
2	L312	HOSE CLAMP
3	L326	BRAIDED HOSE 3/8 COMPR.-G1/4F 150CM GS3
4	F.8.002	DISCHARGE FITTING QUICK CONNECTION
5	F.8.003	HOSE CONNECTOR D20 Di16 BRASS
6	L308	CLEAR ARMOURED DRAIN HOSE
7	H.1.010.01	O-RING 2,62x21,89 EPDM 70 ShA
8	B.2.027	CHECK VALVE H27,5
9	A.5.019	NIPPLE G1/4M-G1/4M WR19 H21,5 S/S
10	L100/1A	WASHER 13,5X19X1,5 COPPER
11	A.5.185	FITTING G1/4F-G1/4F WR17 S/S
12	T.3.007	PFA TUBE 6mm - 4mm
13	T.1.322	TUBE PUMP-HOSE MAIN SUPPLY
14	CL41	GS3 FOOT
15	F.8.022	ADAPTOR FOOT MINI FOR MICRA
Item	**Part number**	**Description**

* This kit is for North America only

4. Water Supply Connection Assembly linea mini (MI)

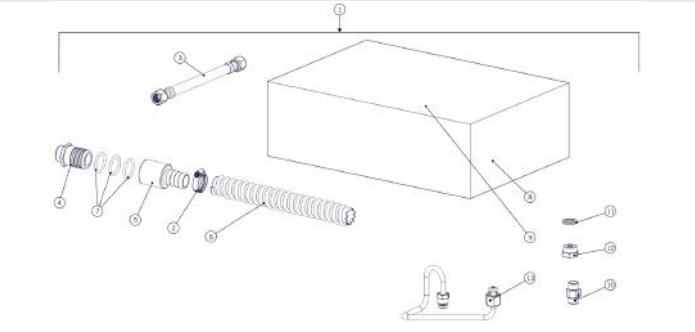

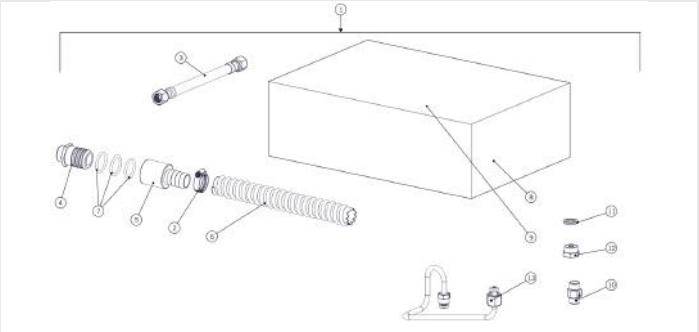

1	1050	PLUMBING CONNECTION KIT LINEA MINI (MI) CE
2	L312	HOSE CLAMP
3	L325	150CM S/S BRAIDED HOSE, G3/8-G1/4 GS3
4	F.8.002	DISCHARGE FITTING QUICK CONNECTION
5	F.8.003	HOSE CONNECTOR QUICK CONNECTION
6	L308	CLEAR ARMOURED DRAIN HOSE
7	H.1.010.01	ORING 3087 (2-118) EPDM 70 SHA
8	Z089	CARTON BOX 320x220x100 WITH LOGO
9	D.5.114	LABEL PLUMBING CONNECTION KIT
10	B.2.027	CHECK VALVE
11	L100/1A	WASHER COPPER
12	A.5.201	FITTING G1/4F-G3/8M S/S
13	T.1.323	TUBE WATER SUCTION - PUMP
Item	**Part number**	**Description**

1	1054	PLUMBING CONNECTION KIT LINEA MINI (MI) ETL *
2	L312	HOSE CLAMP
3	L326	150CM S/S BR.HOSE, 3/8” COMPR.-G1/4
4	F.8.002	DISCHARGE FITTING QUICK CONNECTION
5	F.8.003	HOSE CONNECTOR QUICK CONNECTION
6	L308	CLEAR ARMOURED DRAIN HOSE
7	H.1.010.01	ORING 3087 (2-118) EPDM 70 SHA
8	Z089	CARTON BOX 320x220x100 WITH LOGO
9	D.5.114	LABEL PLUMBING CONNECTION KIT
10	B.2.027	CHECK VALVE
11	L100/1A	WASHER COPPER
12	A.5.201	FITTING G1/4F-G3/8M S/S
13	T.1.323	TUBE WATER SUCTION - PUMP
Item	**Part number**	**Description**

* This kit is for North America only

5. Hole on the Counter linea mini (LM)

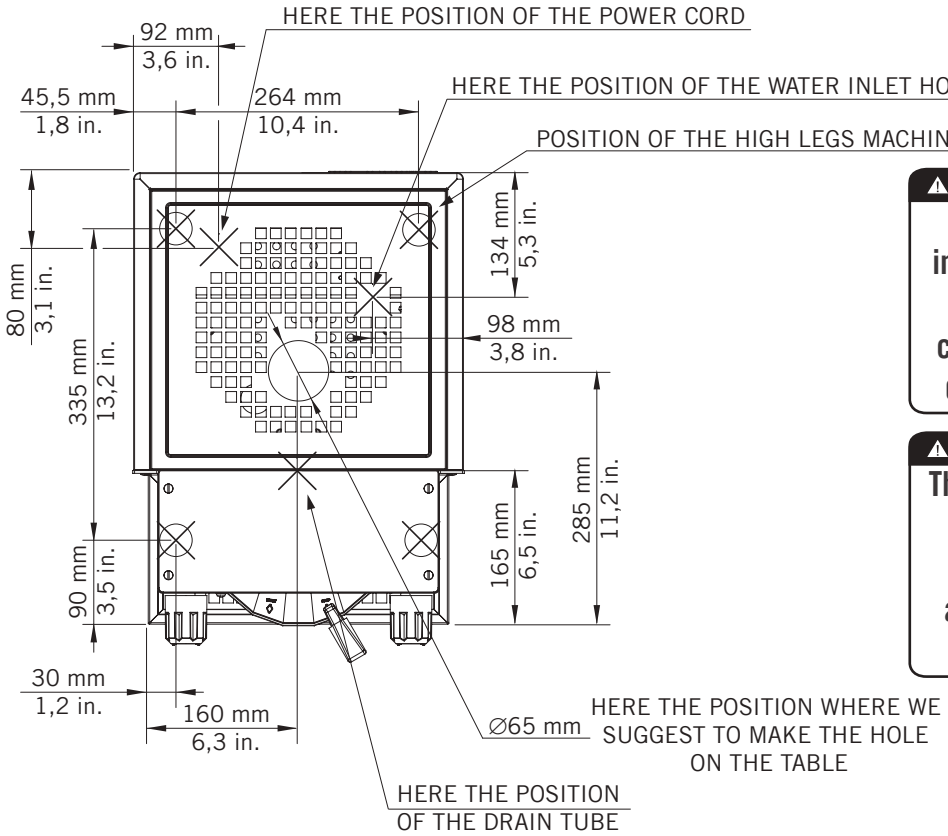

WARNING

If the above-mentioned instructions are not adhered to the manufacturer cannot be held responsible for damage to persons or things.

WARNING

The equipment is to be installed with adequate backflow protection to comply with applicable federal, state, and local codes.

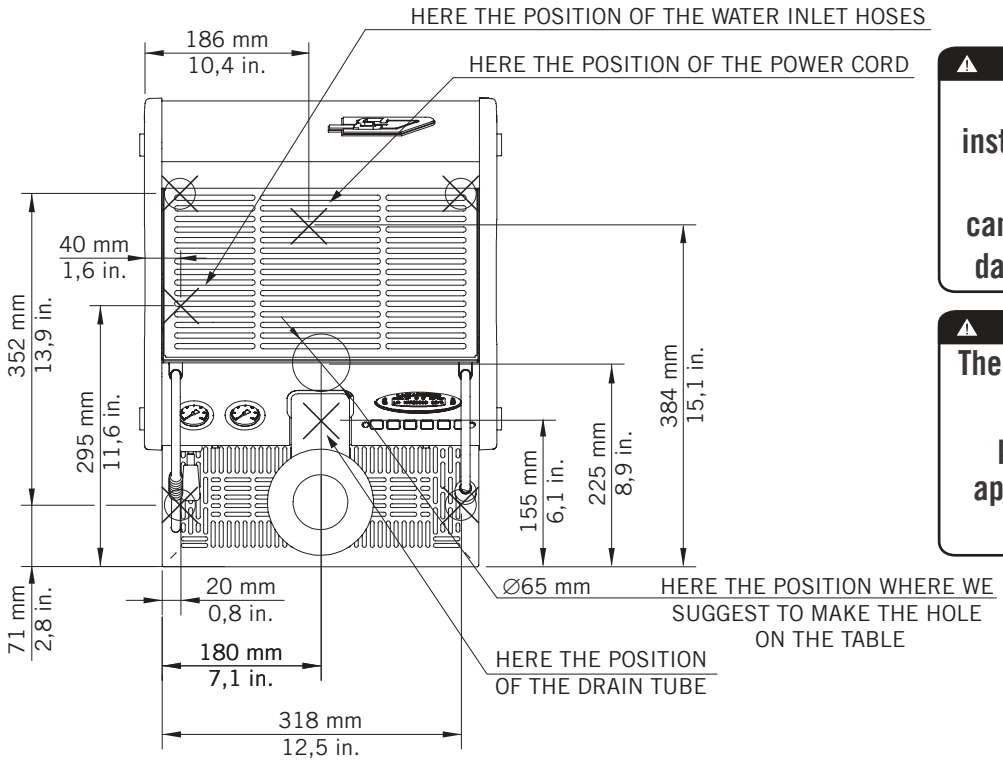

WARNING

If the above-mentioned instructions are not adhered to the manufacturer cannot be held responsible for damage to persons or things.

WARNING

The equipment is to be installed with adequate backflow protection to comply with applicable federal, state, and local codes.

7. Hole on the Counter linea micra

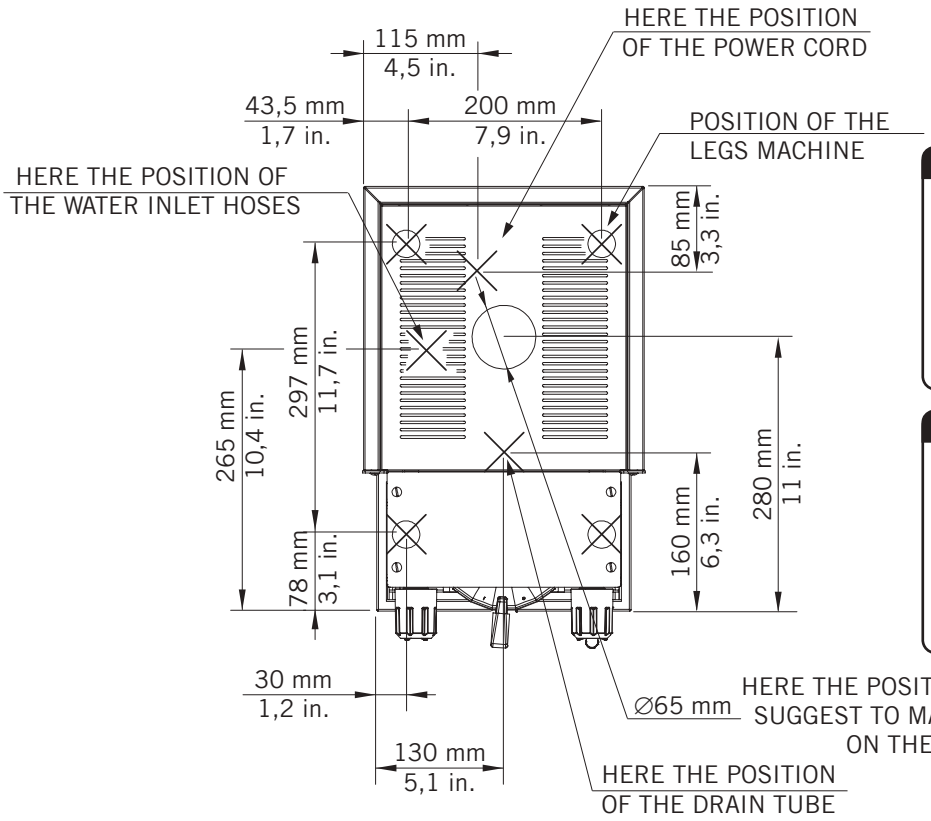

WARNING

If the above-mentioned instructions are not adhered to the manufacturer cannot be held responsible for damage to persons or things.

WARNING

The equipment is to be installed with adequate backflow protection to comply with applicable federal, state, and local codes.

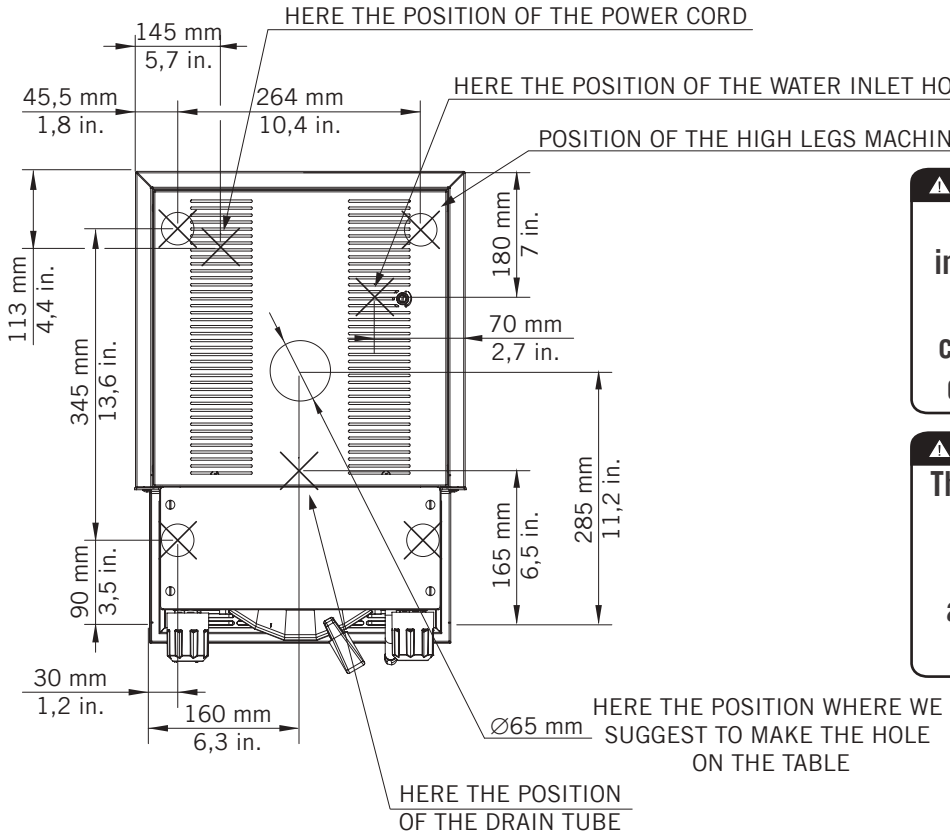

WARNING

If the above-mentioned instructions are not adhered to the manufacturer cannot be held responsible for damage to persons or things.

WARNING

The equipment is to be installed with adequate backflow protection to comply with applicable federal, state, and local codes.

9. Water Supply Connection Instructions linea mini

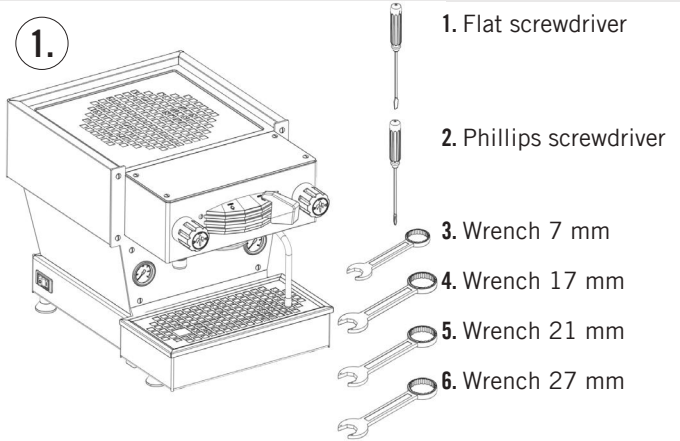

WARNING

Hazardous voltage disconnect from power supply before servicing.

WARNING

The integrated brew group and steam boiler contain water at elevated temperature. Water temperature over 125°F / 52°C can cause severe burns instantly or death from scalding (integrated brew group 200°F/93.3°C - steam boiler 260°F / 127°C).

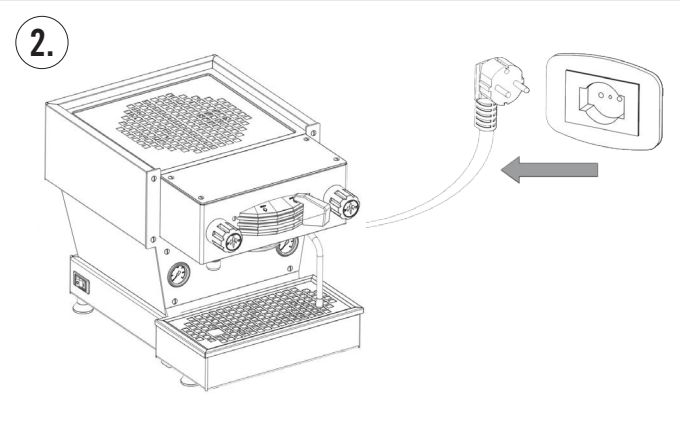

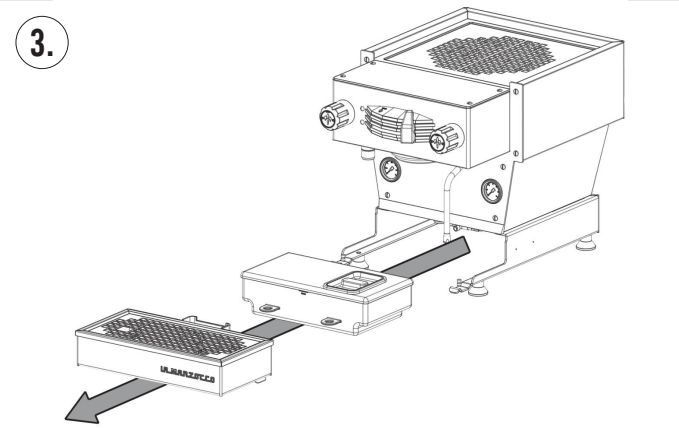

4.

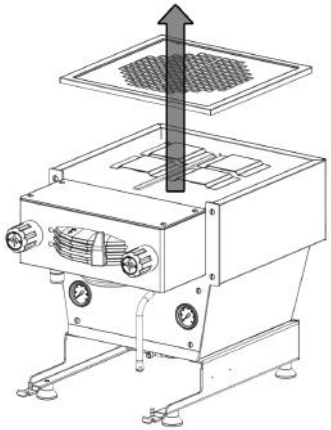

5.

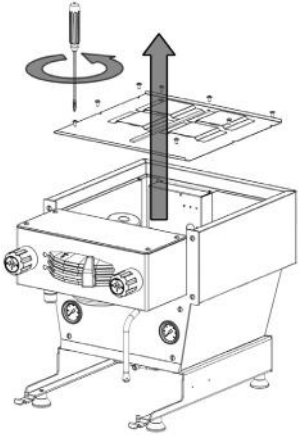

6.

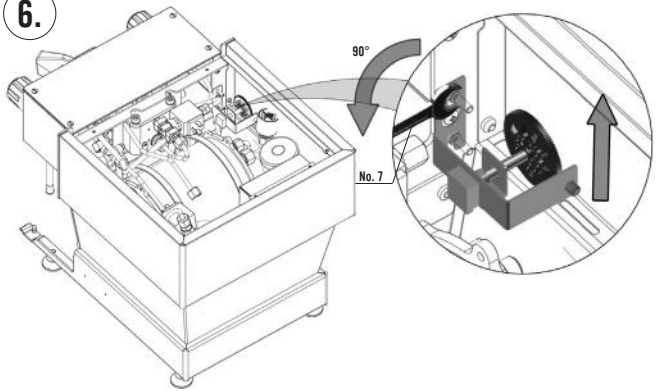

7.

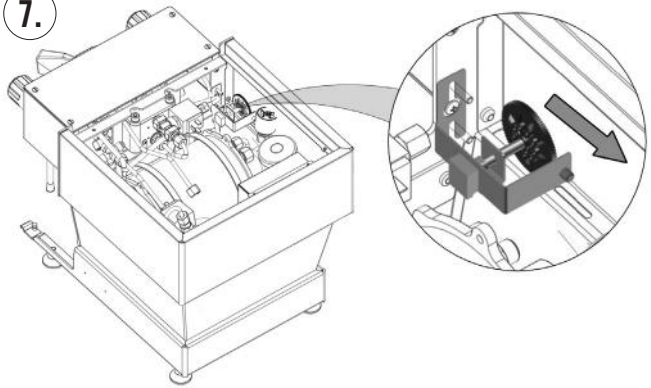

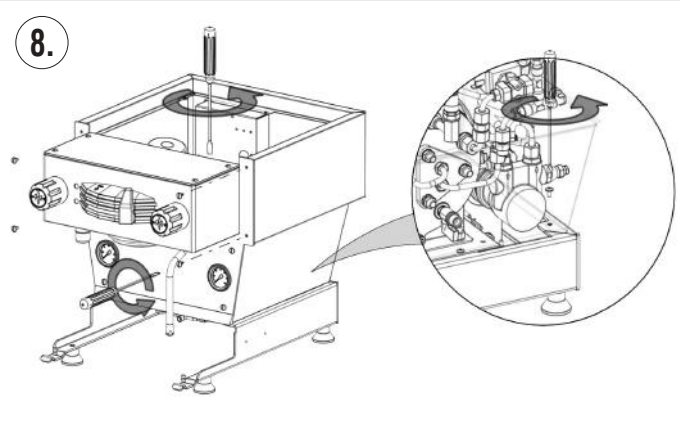

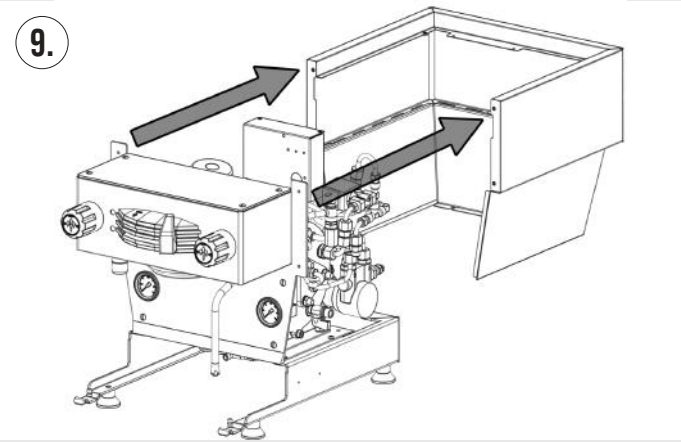

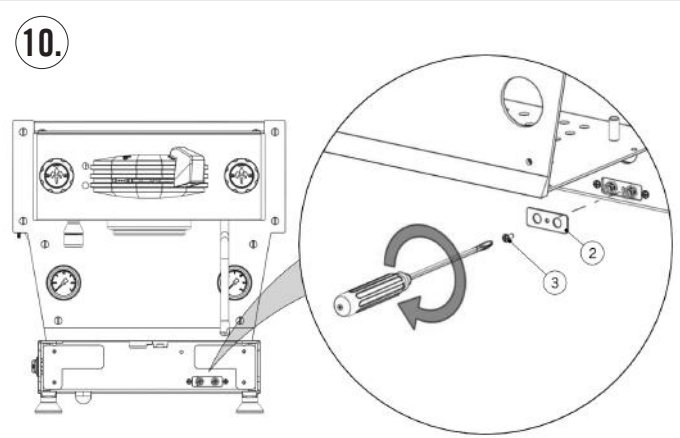

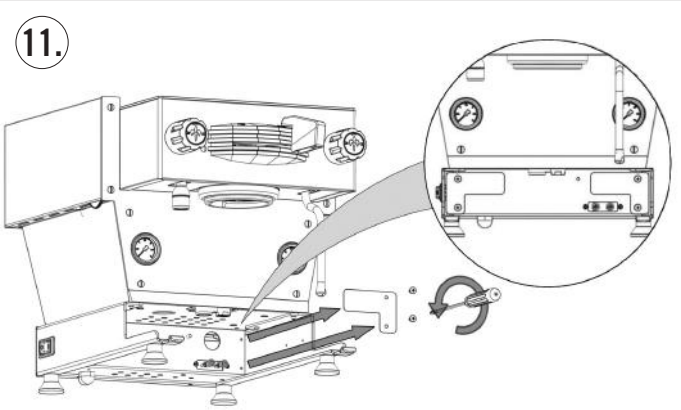

This kit is for North America only (ETL)

12.

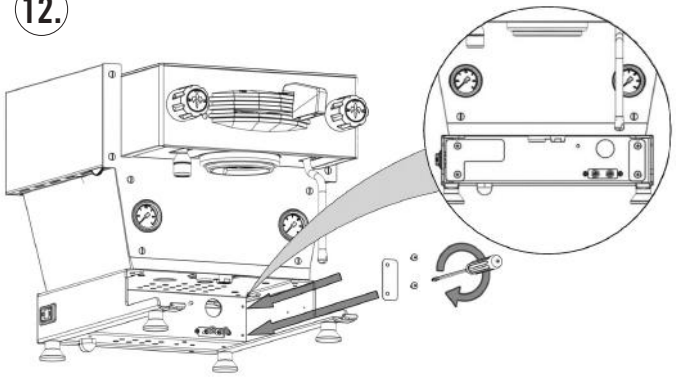

This kit is for North America only (ETL)

13.

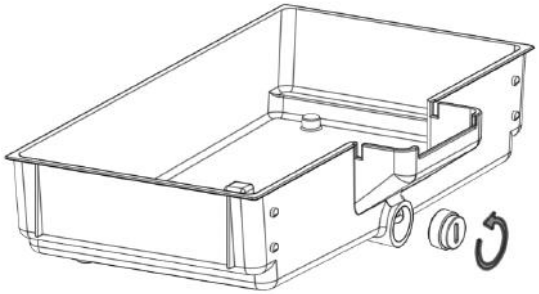

14.

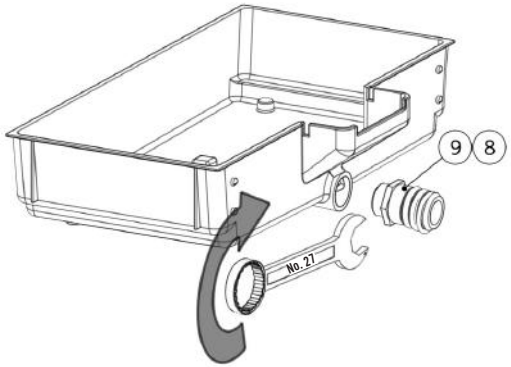

15.

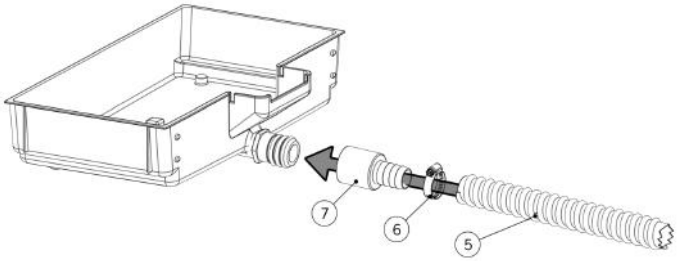

16.

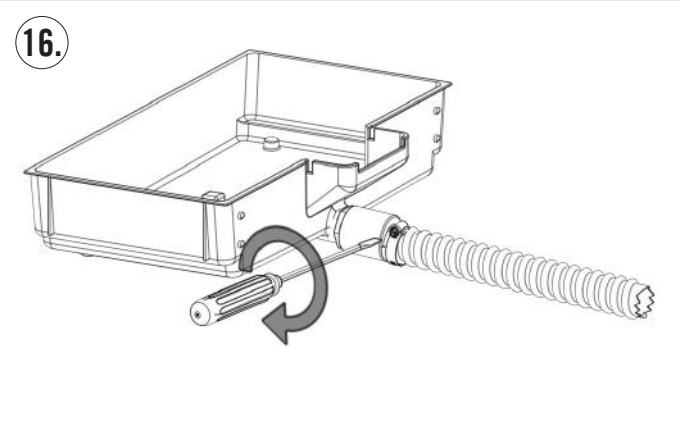

17.

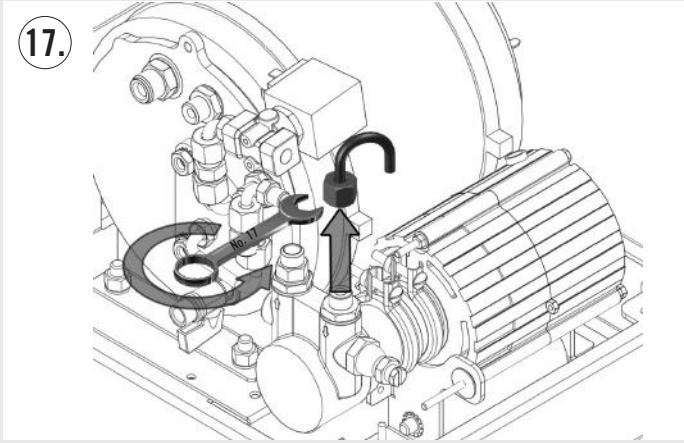

18.

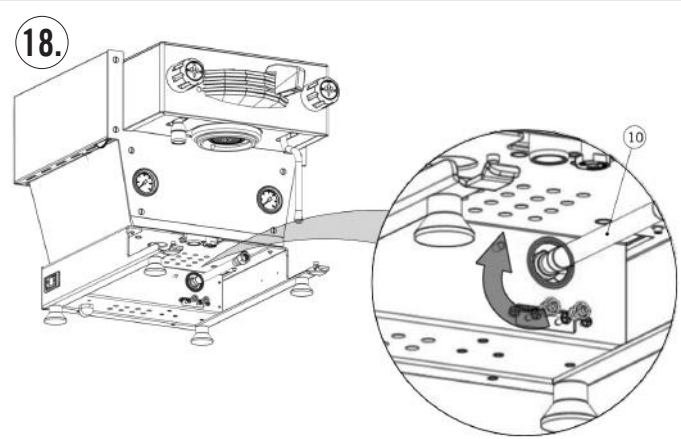

19.

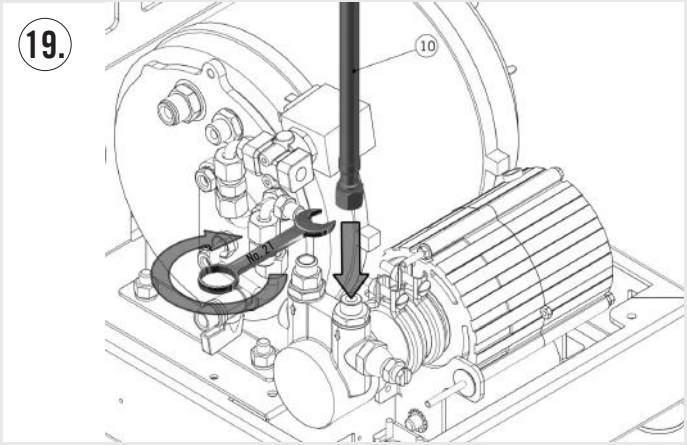

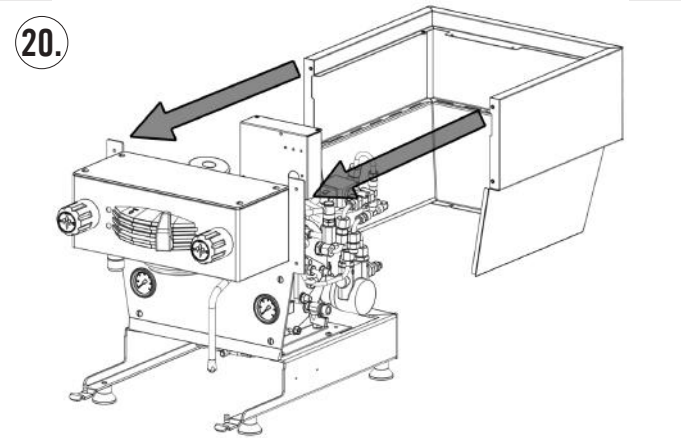
20.

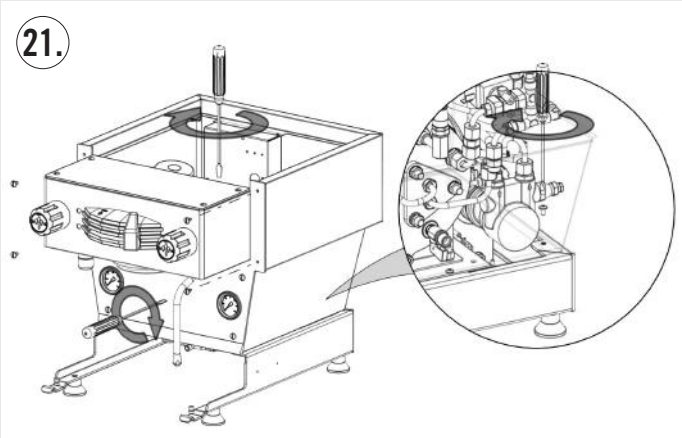
21.

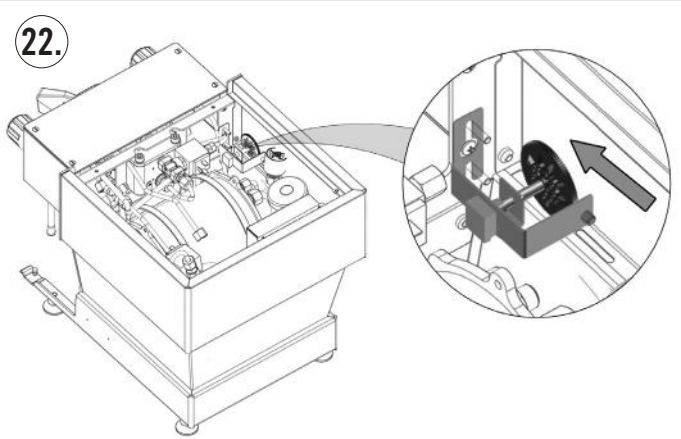
22.

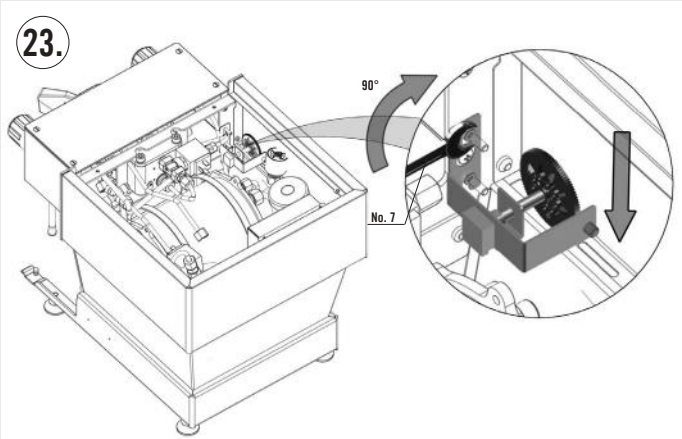
23.
90°
No. 7

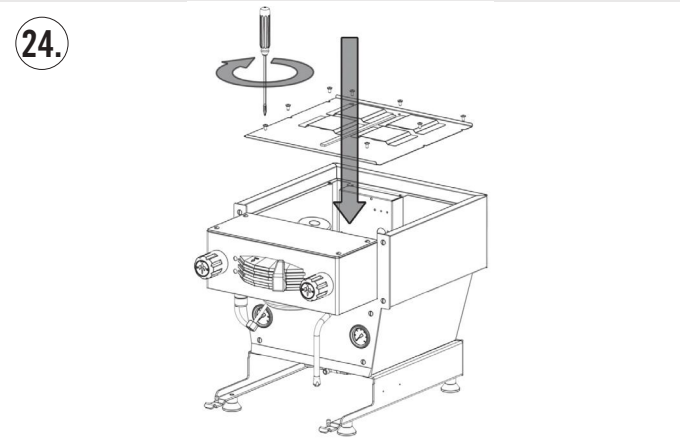
24.

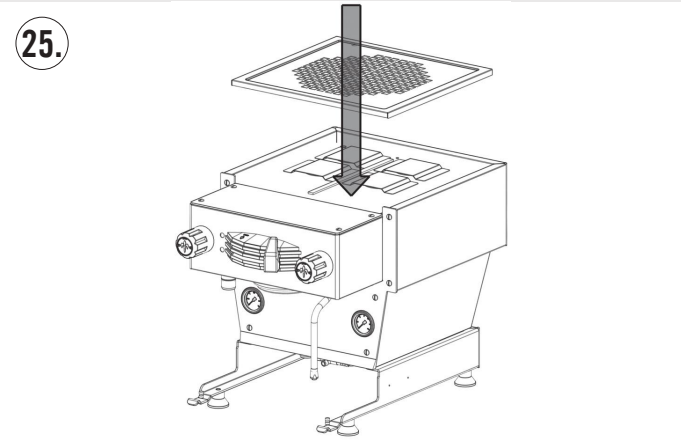
25.

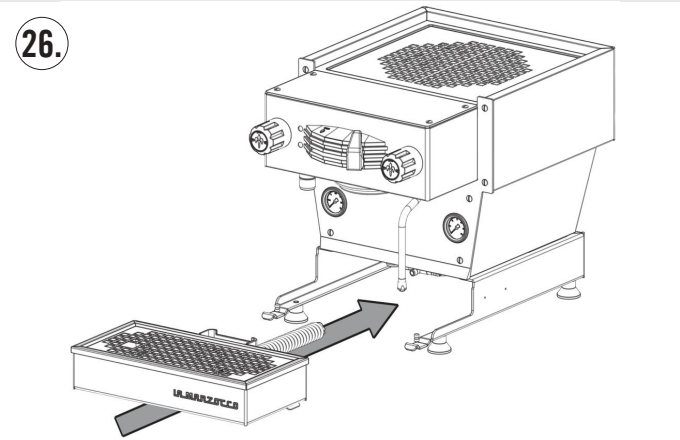
26.

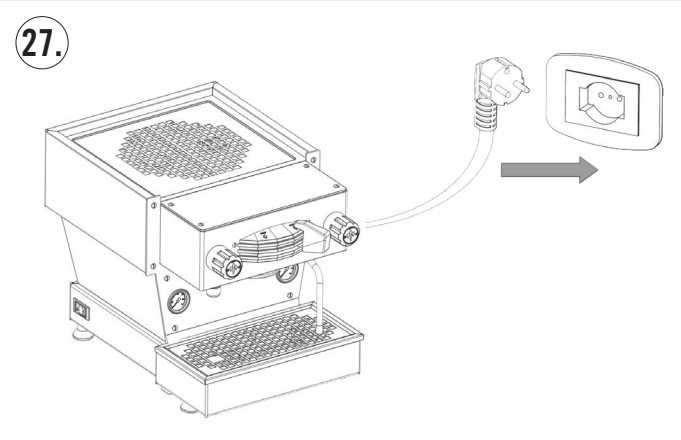
27.

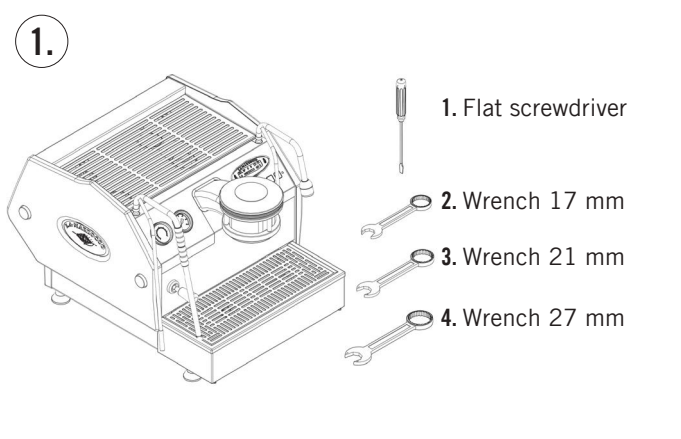

WARNING

Hazardous voltage disconnect from power supply before servicing.

WARNING

The integrated brew group and steam boiler contain water at elevated temperature. Water temperature over 125°F / 52°C can cause severe burns instantly or death from scalding (integrated brew group 200°F/93.3°C - steam boiler 260°F / 127°C).

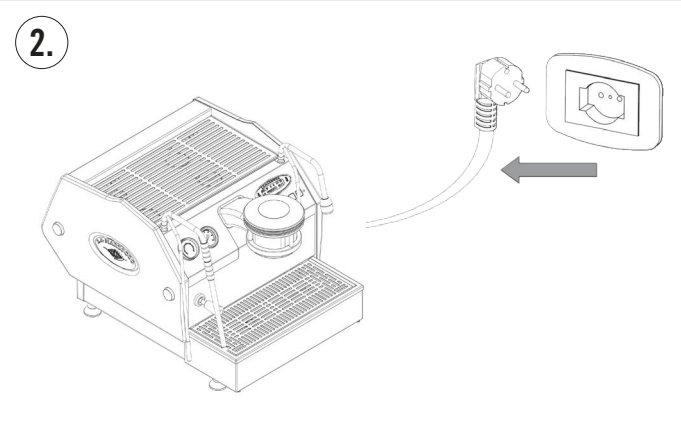

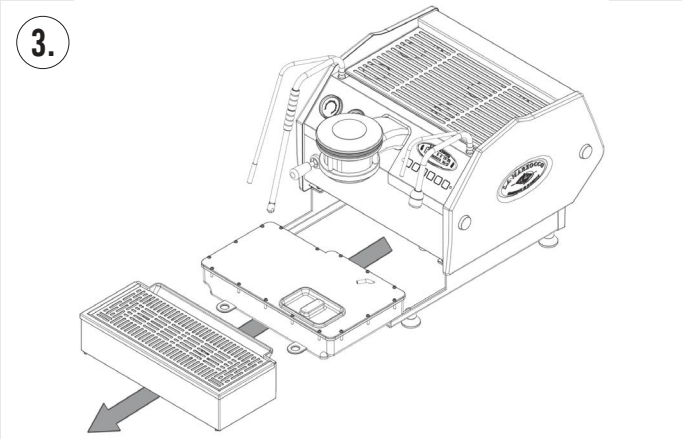

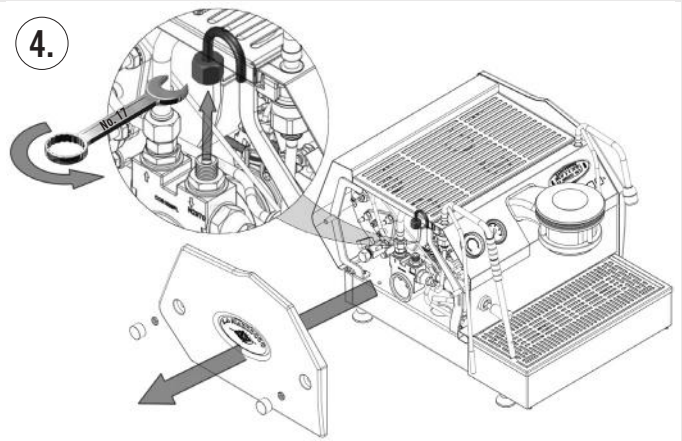
4.
No. 11

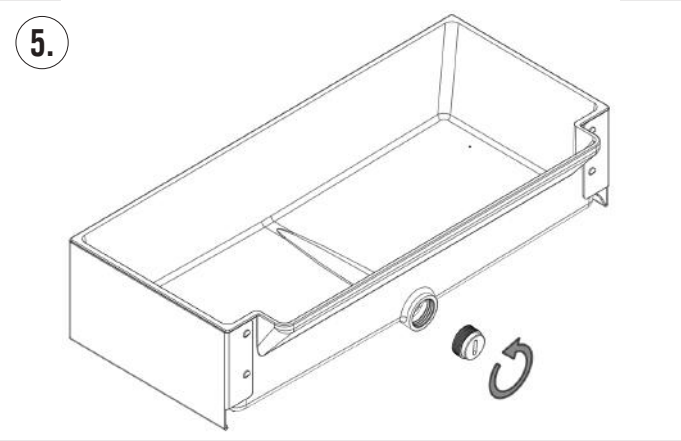
5.

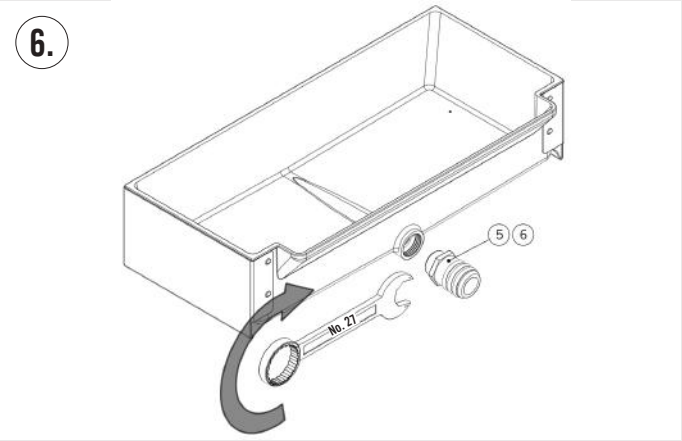
6.
5 6
No. 27

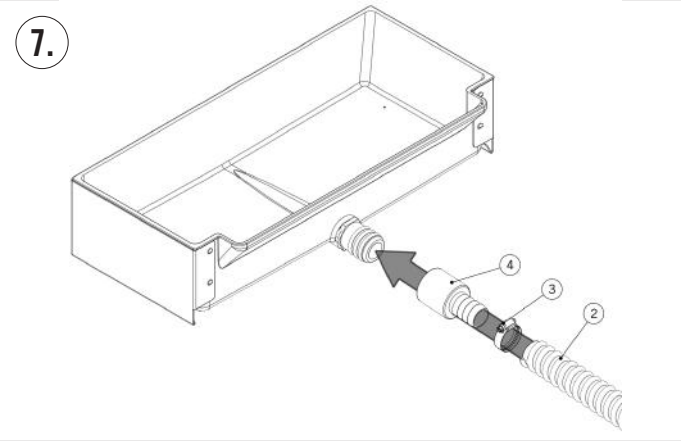
7.
4
3
2

8.

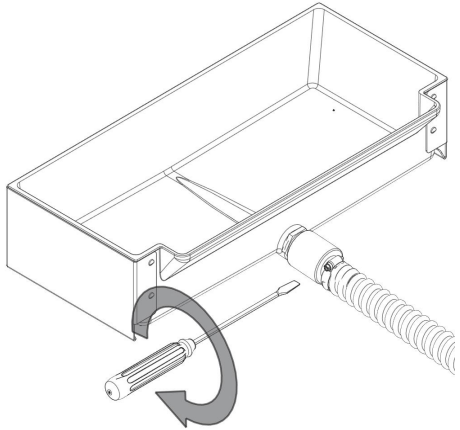

9.

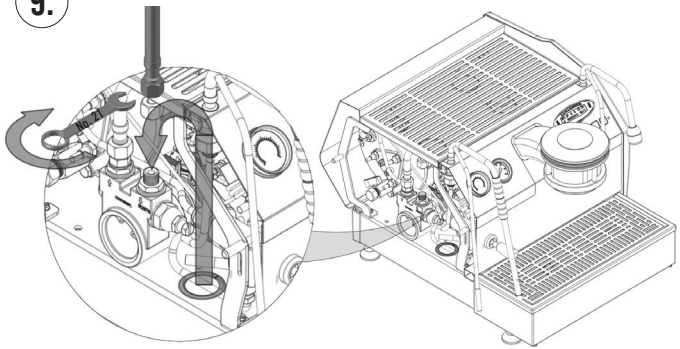

10.

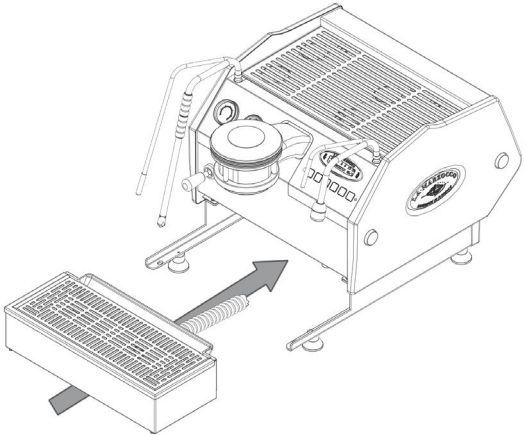

11.

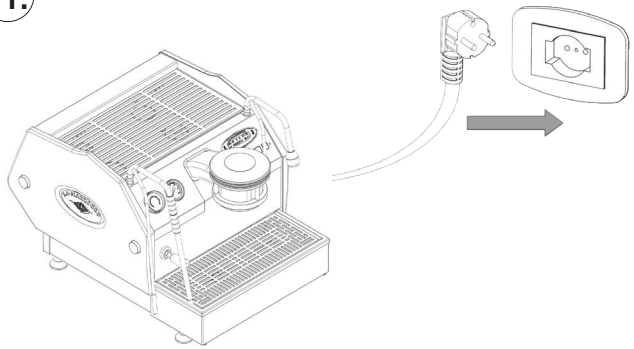

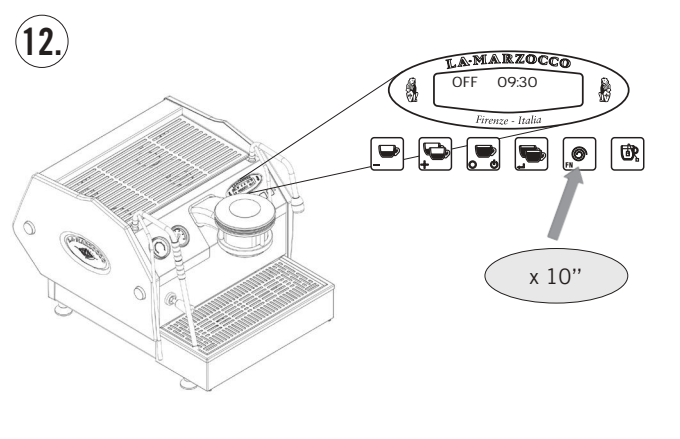
12.
LA MARZOCCO
OFF 09:30
Firenze - Italia
x 10''

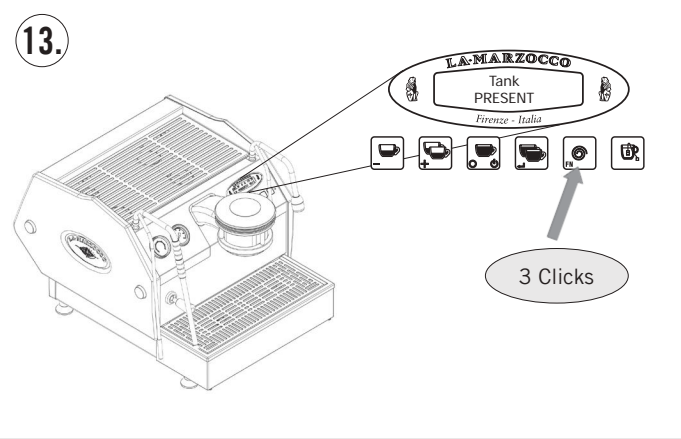
13.
LA MARZOCCO
Tank
PRESENT
Firenze - Italia
3 Clicks

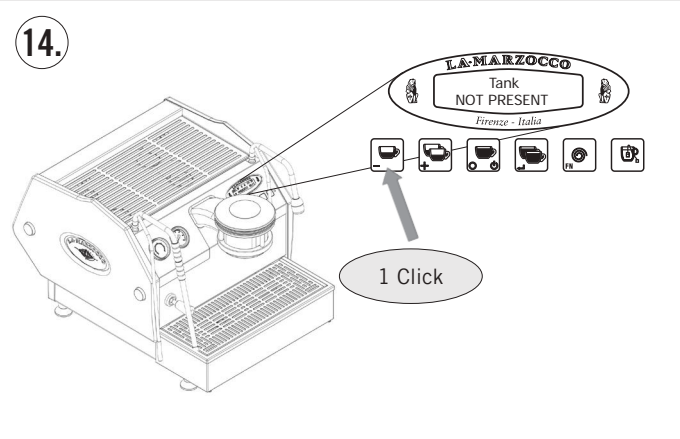
14.
LA MARZOCCO
Tank
NOT PRESENT
Firenze - Italia
1 Click

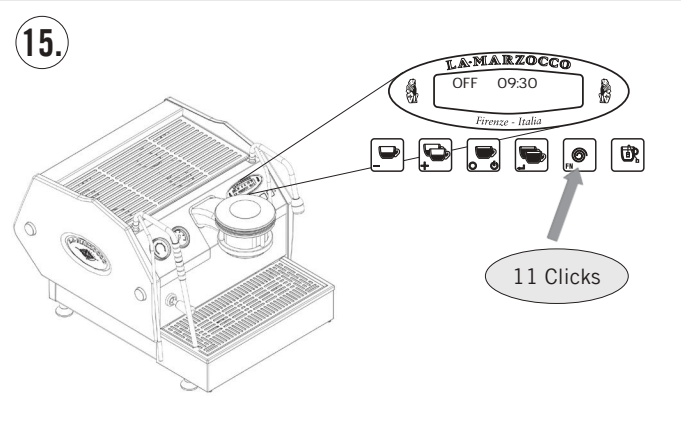
15.
LA MARZOCCO
OFF 09:30
Firenze - Italia
11 Clicks

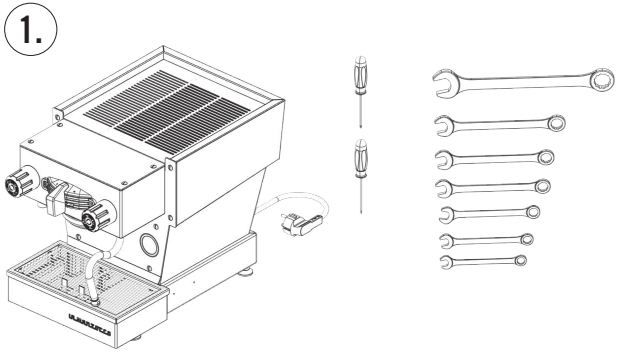

1. Flat screwdriver
2. Phillips screwdriver
3. Wrench 7 mm
4. Wrench 12 mm
5. Wrench 13 mm
6. Wrench 14 mm
7. Wrench 16 mm
8. Wrench 17 mm
9. Wrench 18 mm
10. Wrench 19 mm
11. Wrench 26 mm

WARNING

Hazardous voltage disconnect from power supply before servicing.

WARNING

The integrated brew group and steam boiler contain water at elevated temperature. Water temperature over 125°F / 52°C can cause severe burns instantly or death from scalding (integrated brew group 200°F/93.3°C - steam boiler 260°F / 127°C).

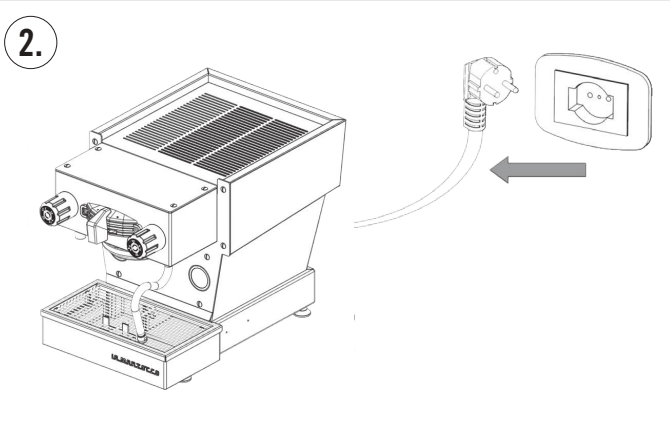

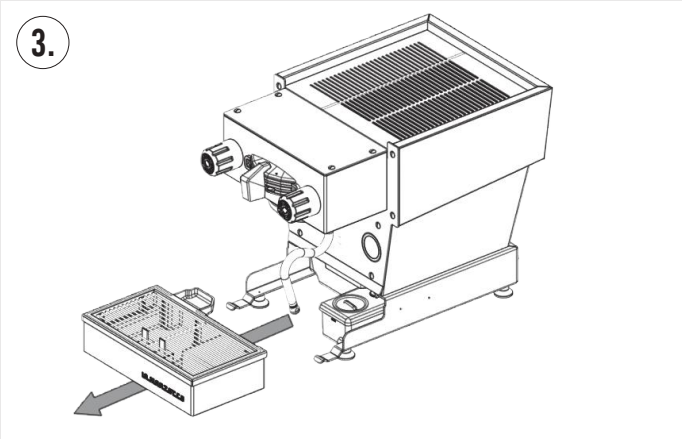

4.

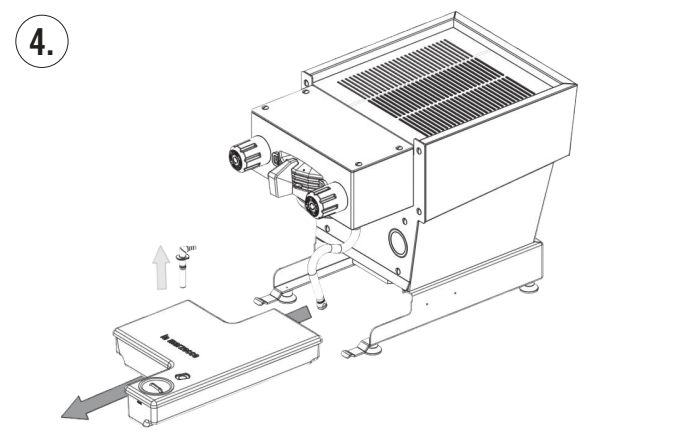

5.

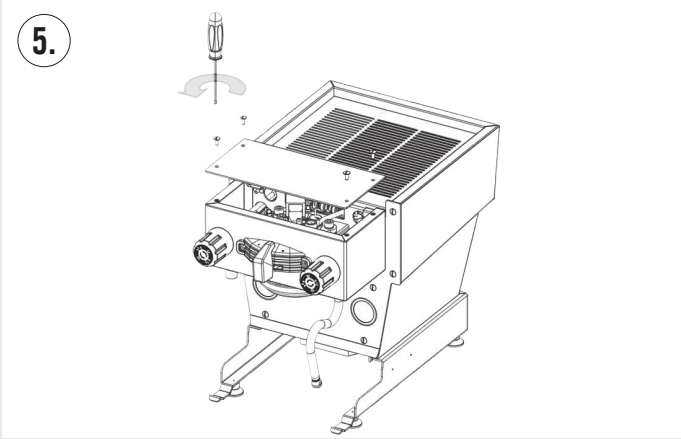

6.

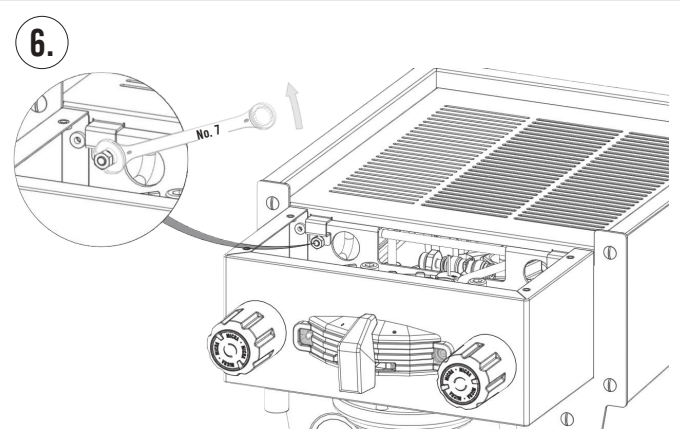

7.

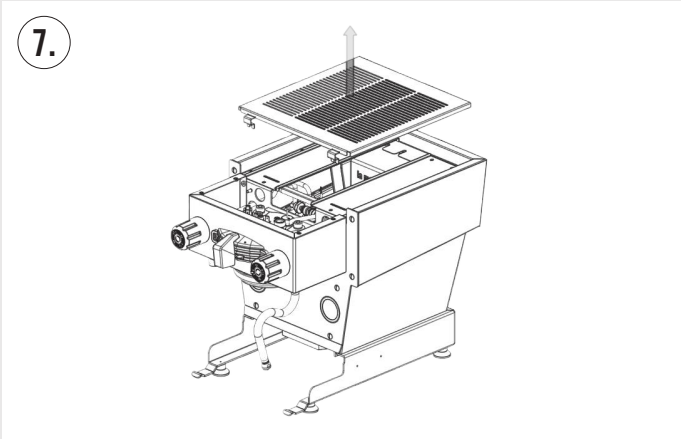

8.

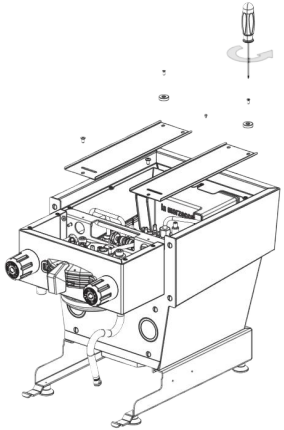

9.

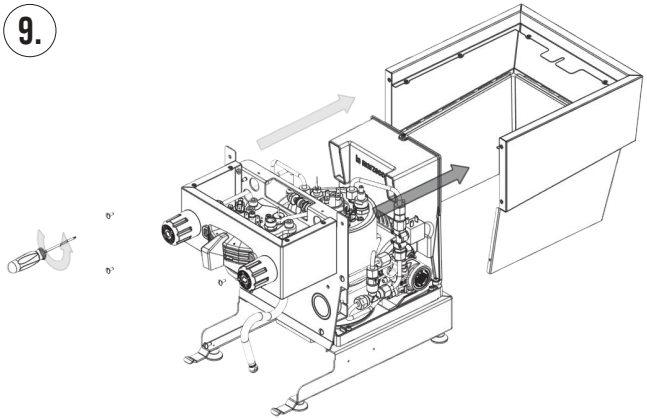

10.

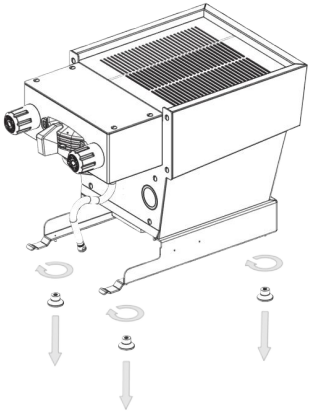

11.

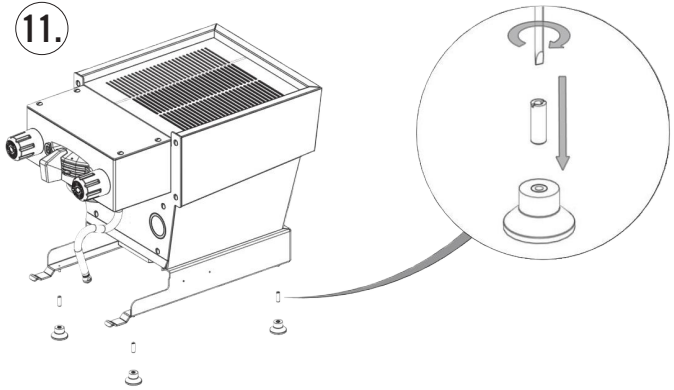

12.

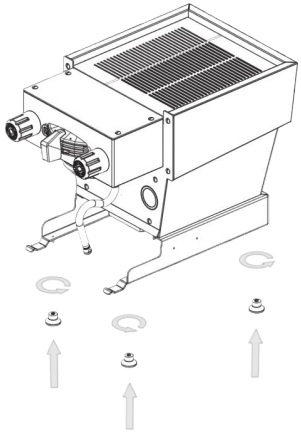

13.

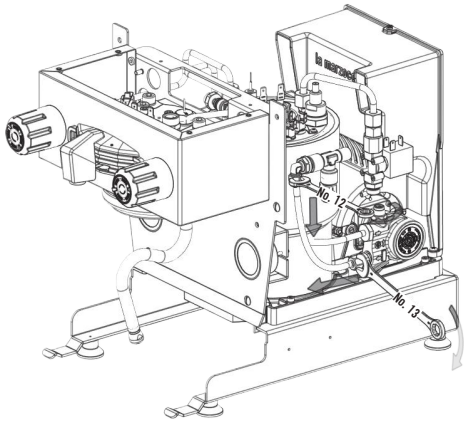

14.

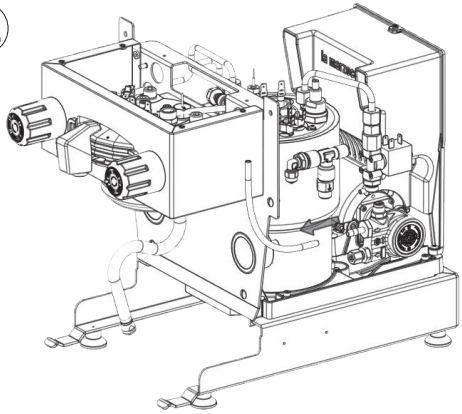

15.

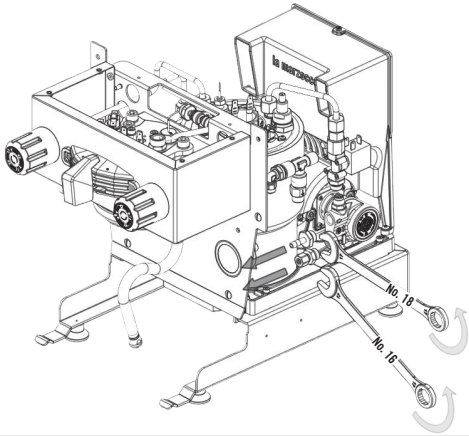

16.

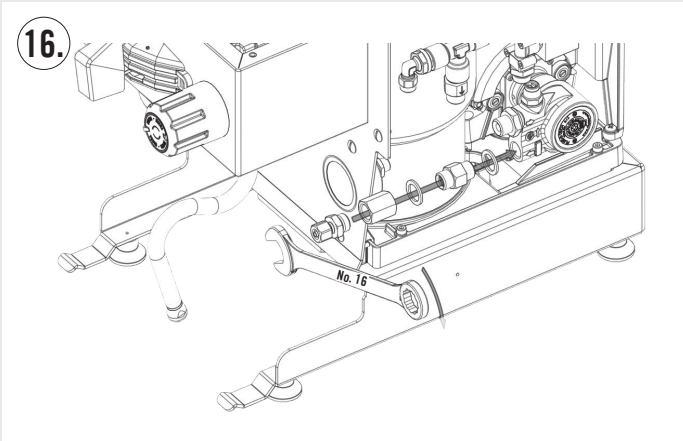

17.

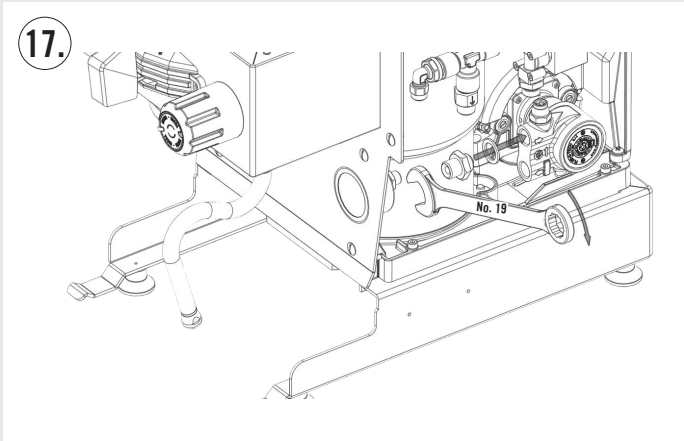

18.

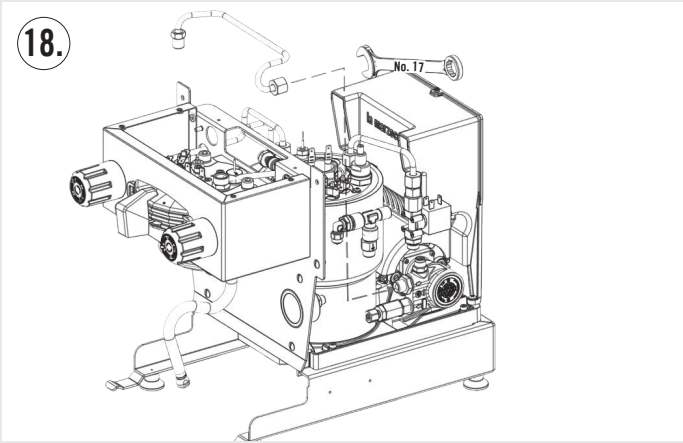

19.

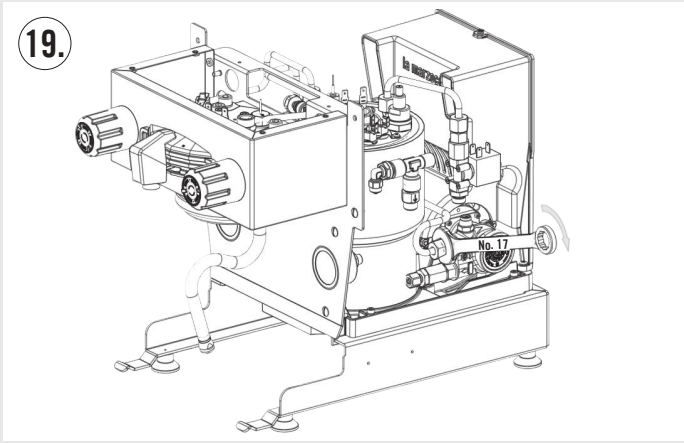

20.

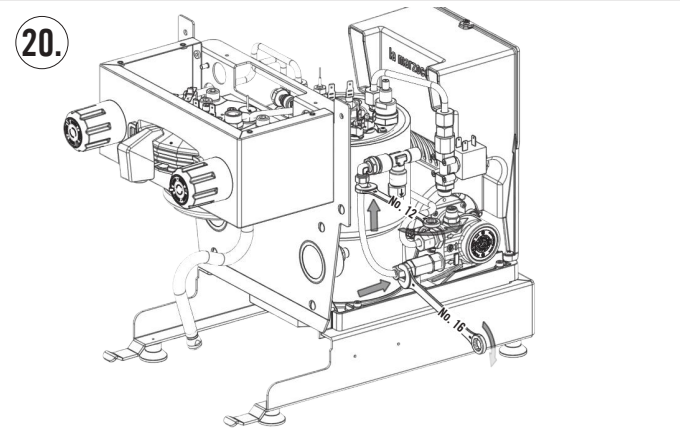

21.

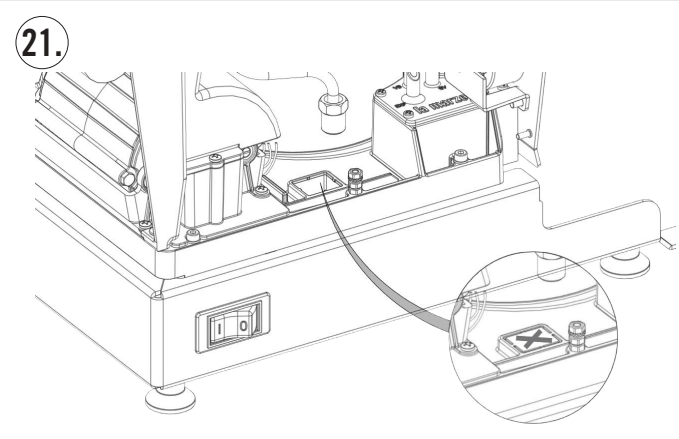

22.

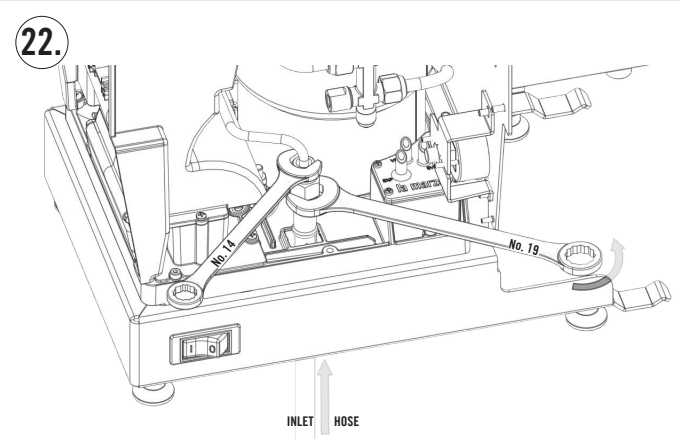

23.

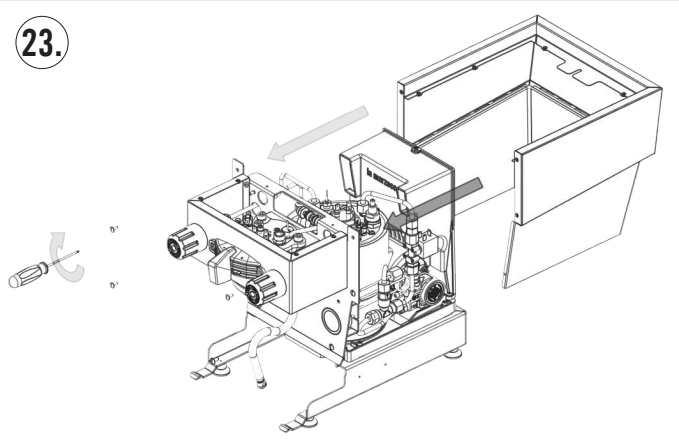

24.

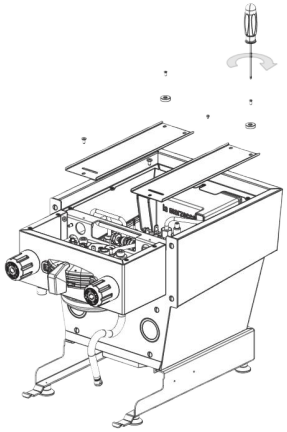

25.

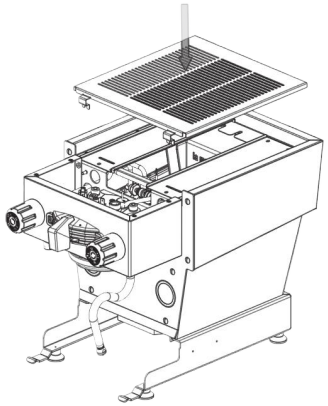

26.

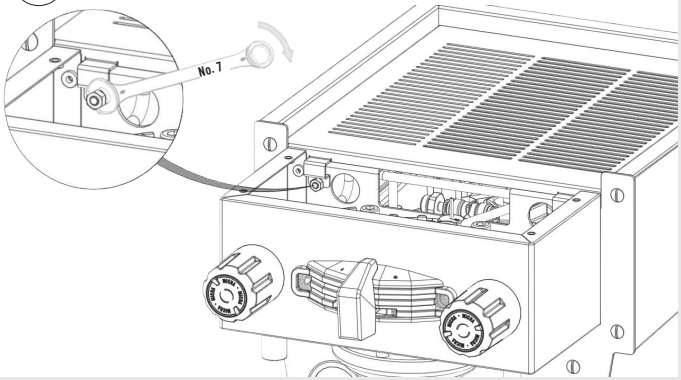

27.

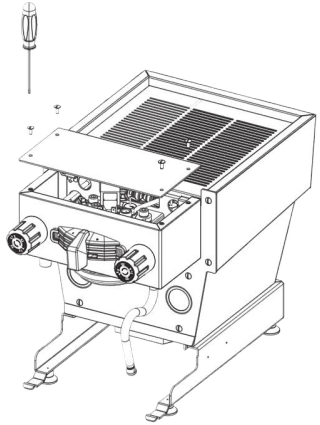

28.

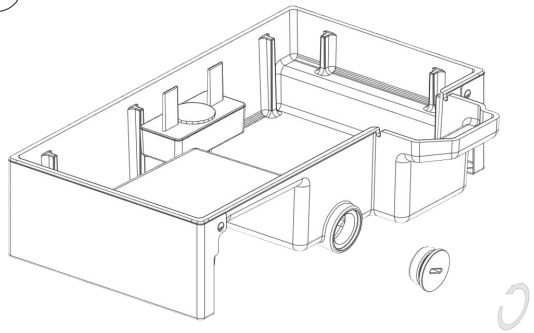

29.

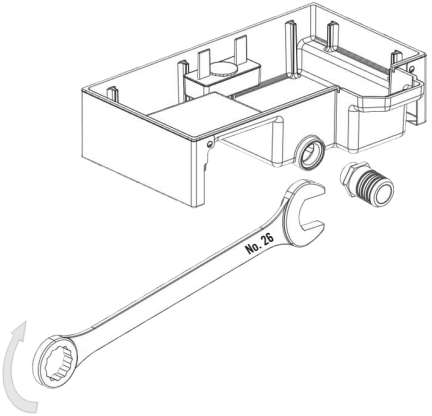

30.

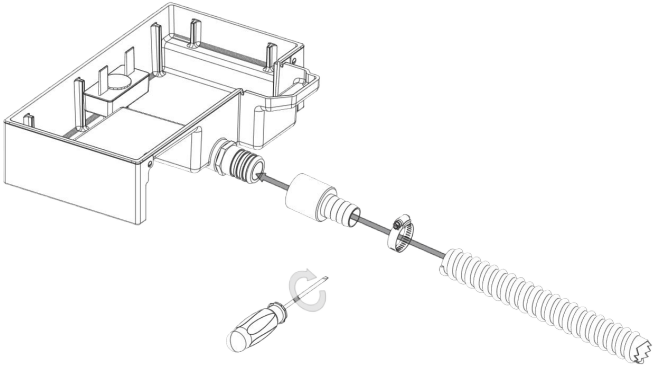

31.

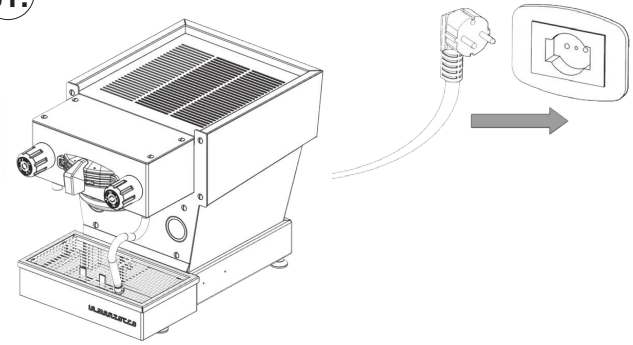

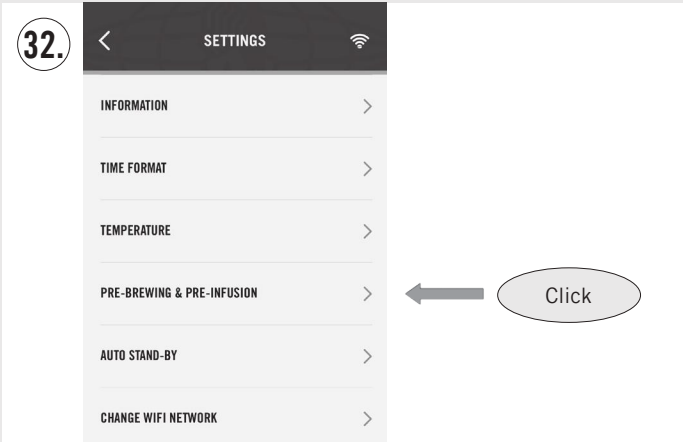

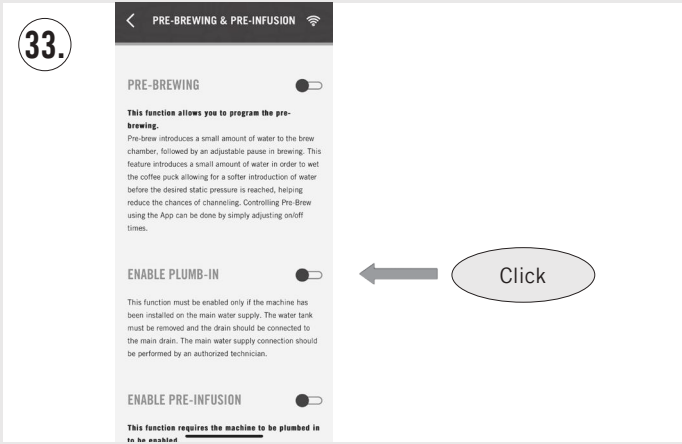

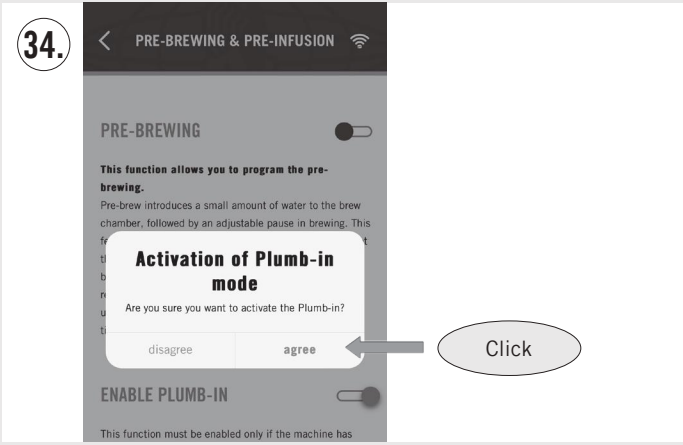

Note for draining the machine:
For draining the machine is necessary to deactivate the Plumb-in mode. In this way the machine will be in the standard configuration with the tank prensent.

12. Water Supply Connection Instructions linea mini (MI)

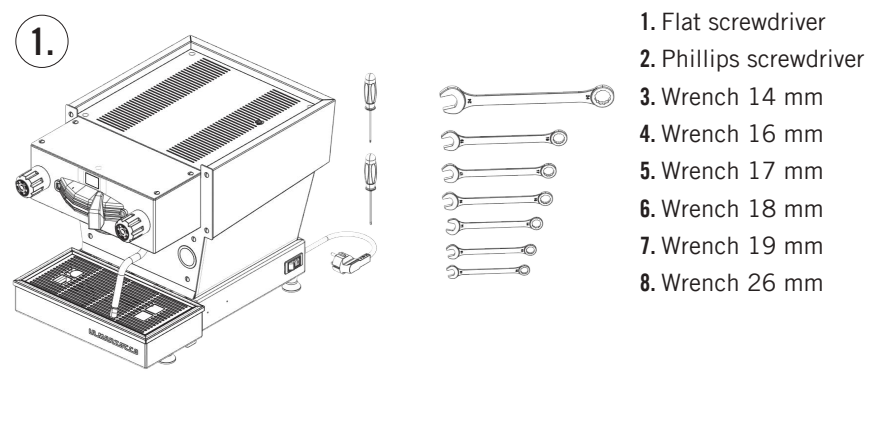

1. Flat screwdriver
2. Phillips screwdriver
3. Wrench 14 mm
4. Wrench 16 mm
5. Wrench 17 mm
6. Wrench 18 mm
7. Wrench 19 mm
8. Wrench 26 mm

⚠ WARNING ⚠

Hazardous voltage disconnect from power supply before servicing.

⚠ WARNING ⚠

The integrated brew group and steam boiler contain water at elevated temperature. Water temperature over 125°F / 52°C can cause severe burns instantly or death from scalding (integrated brew group 200°F/93.3°C - steam boiler 260°F / 127°C).

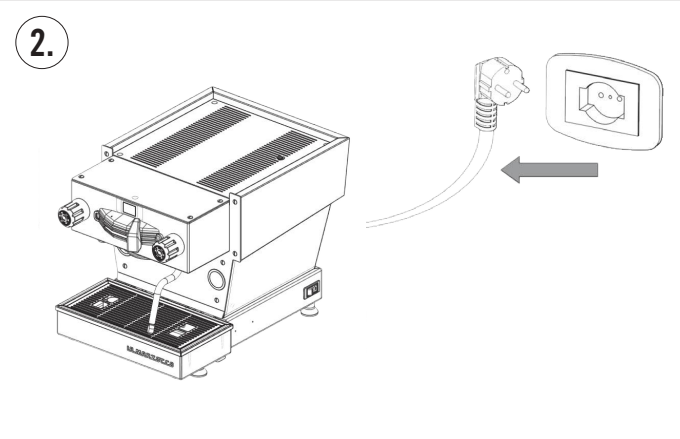

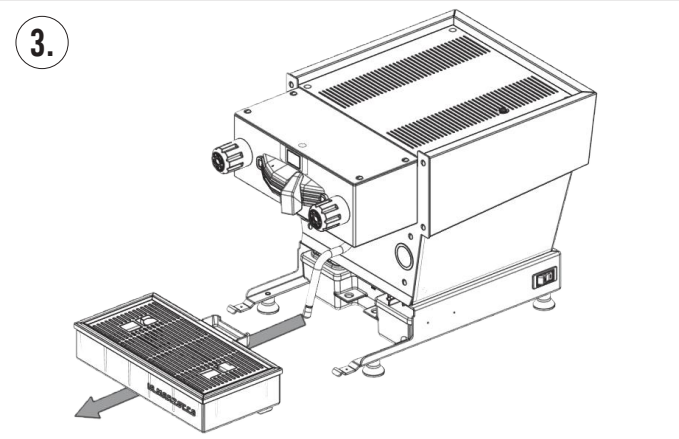

4.

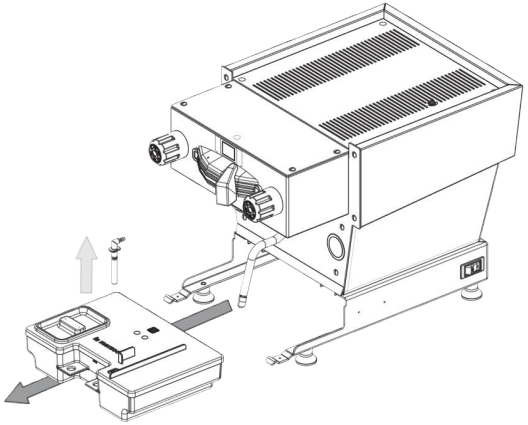

5.

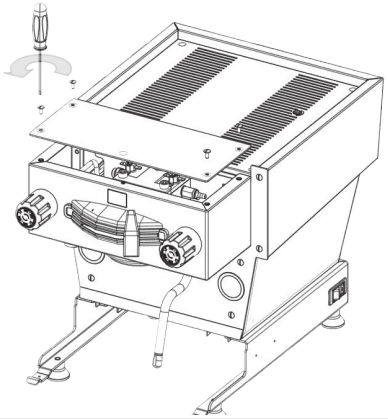

6.

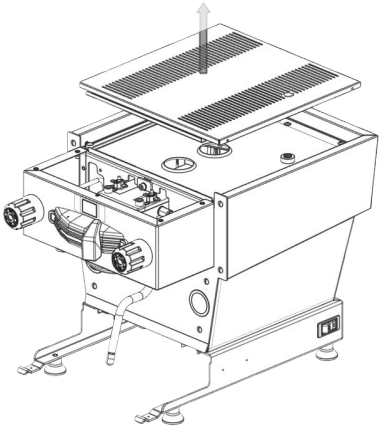

7.

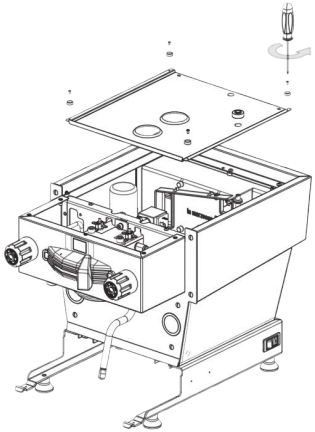

8.

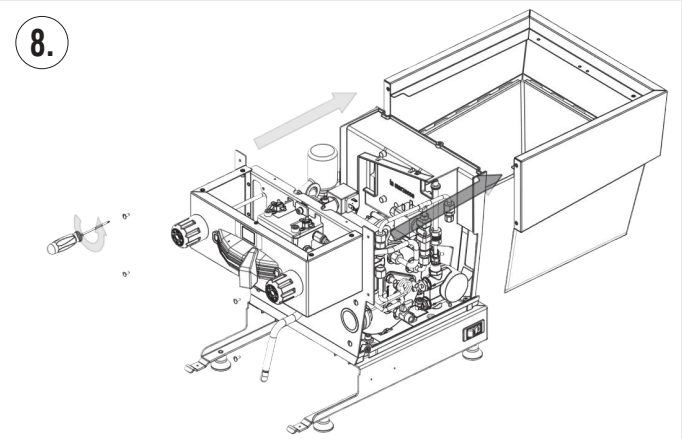

9.

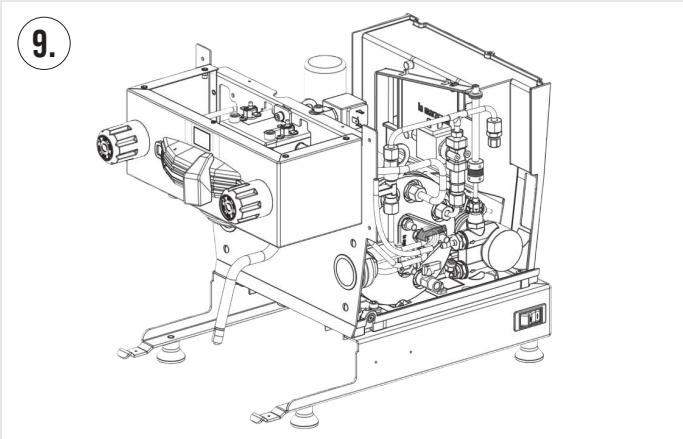

10.

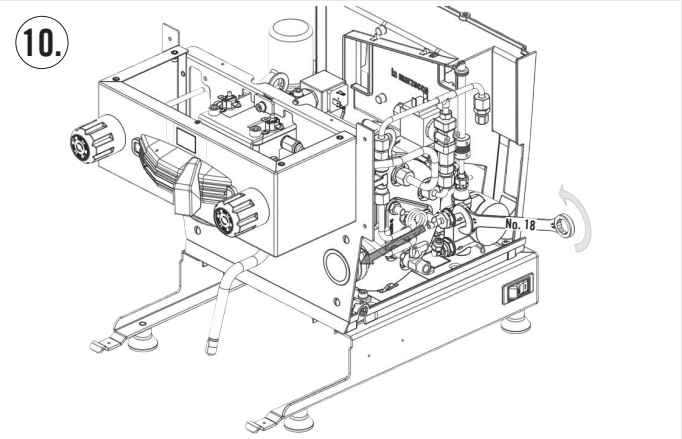

11.

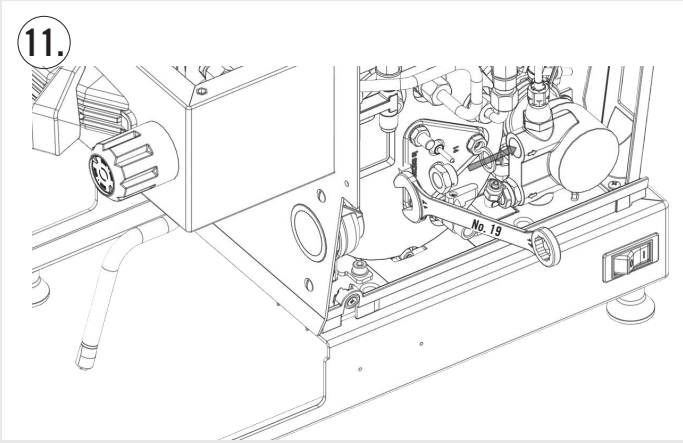

12.

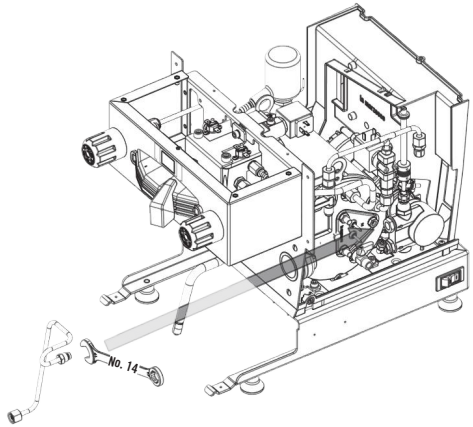

13.

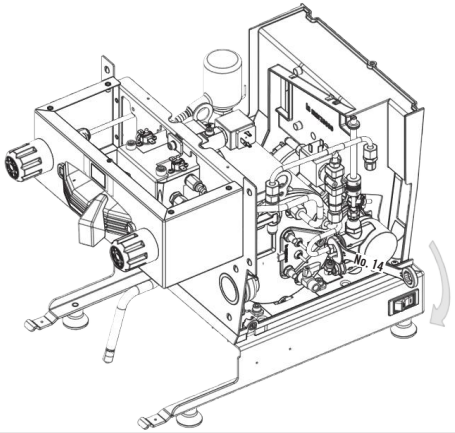

14.

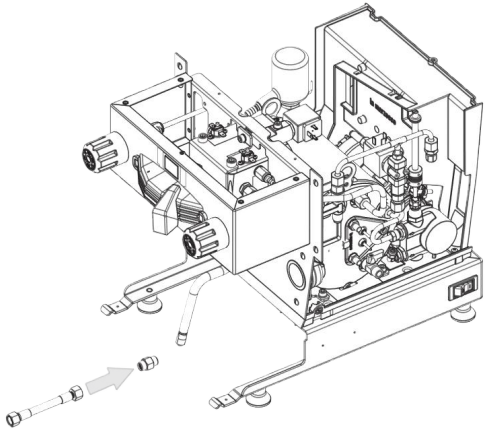

15.

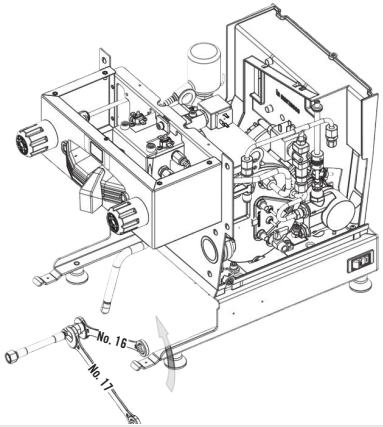

16.

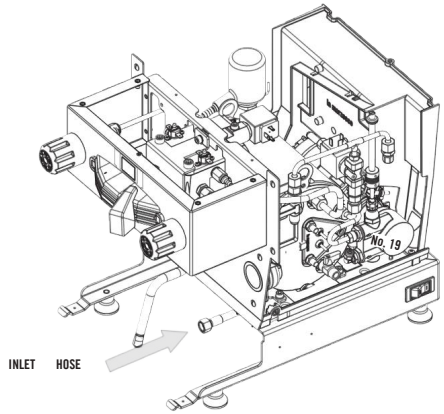

17.

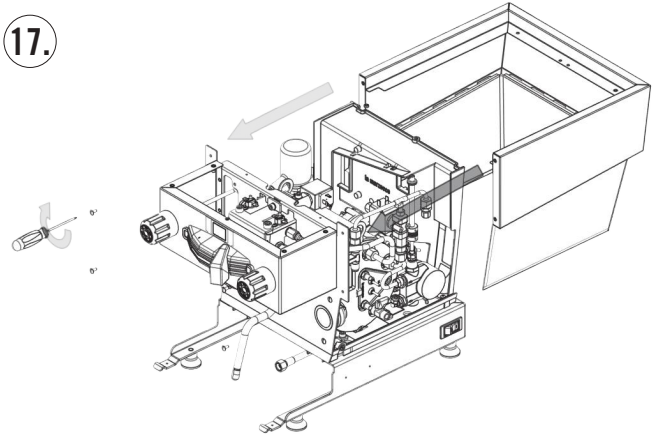

18.

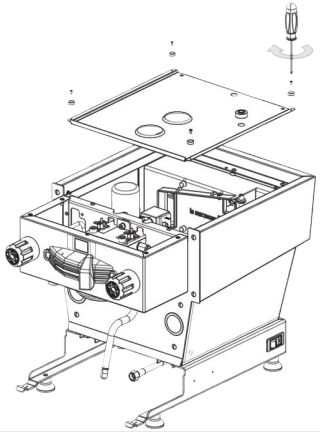

19.

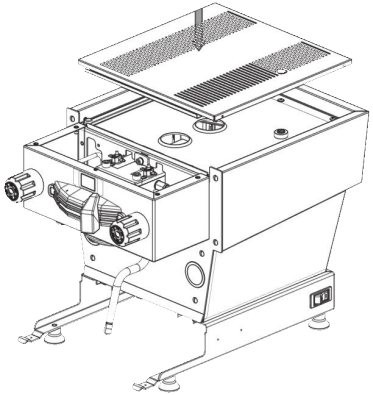

20.

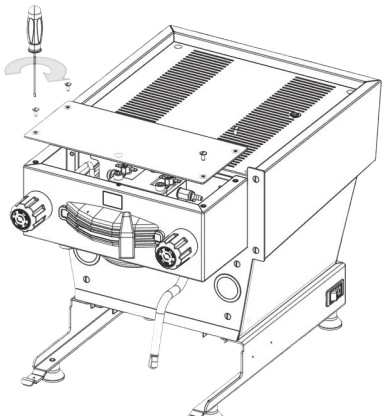

21.

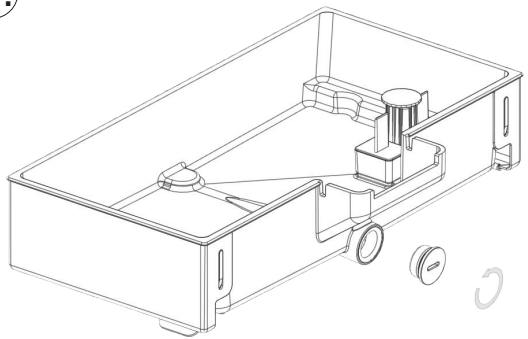

22.

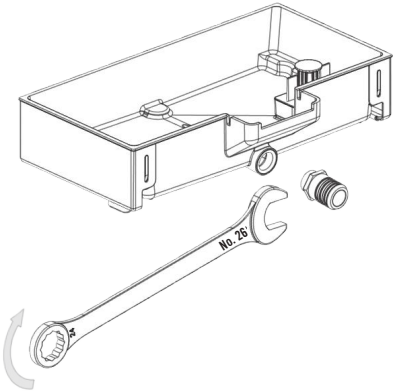

23.

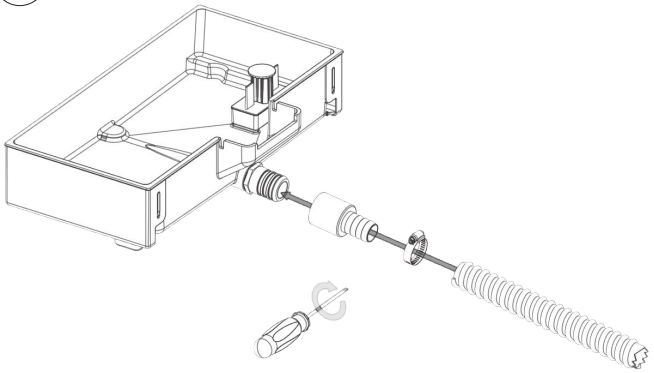

24.

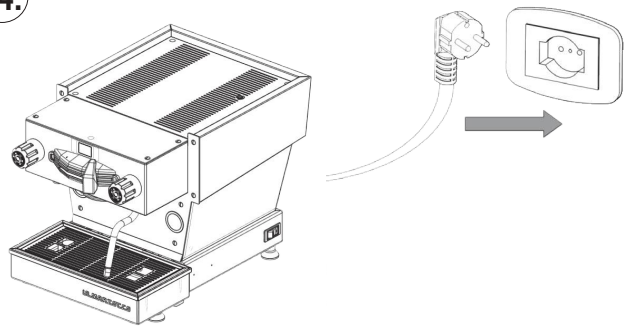

25.

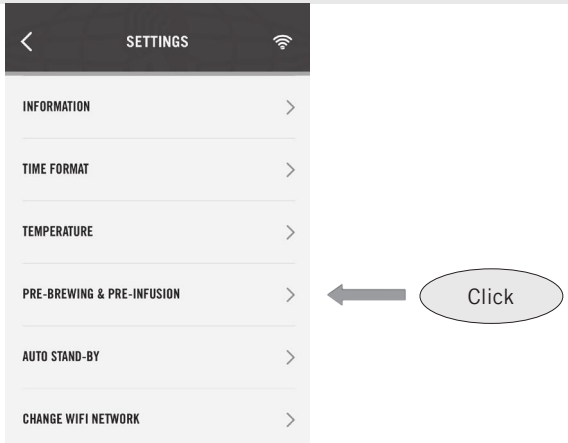

26.

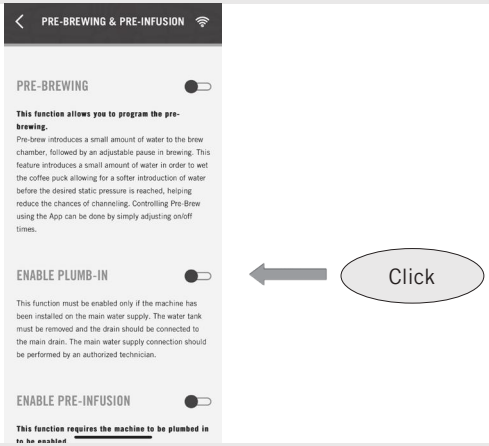

27.

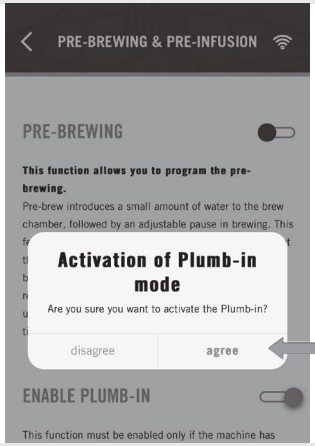

Note for draining the machine: For draining the machine is necessary to deactivate the Plumb-in mode. In this way the machine will be in the standard configuration with the tank prensent.

Click