en

Instructions for use for A1/A100

Your A1/A100

Control elements 28

Important information 30
Proper use 30
For your safety 30

1 Preparing and using for the first time 32
Setting up the machine 32
Filling the bean container 32
First-time use 33
First-time use with filter cartridge activation 33
First-time use without filter cartridge activation 34
Filling the water tank 34
Determining the water hardness 34

2 Preparation 35
Ristretto, espresso and coffee 35
Permanently setting the amount of water for the cup size 35
Ground coffee 35
Adjusting the grinder 36

3 Daily operation 37
Switching on the machine 37
Daily maintenance 37
Switching off the machine 37

4 Permanent settings in programming mode 37
Inserting and activating the filter 37
Setting the water hardness 38
Automatic switch-off 38

5 Maintenance 39
Cleaning the machine 39
Descaling the machine 40
Changing the filter 41
Descaling the water tank 41
Cleaning the bean container 42

6 Messages on symbol display 42

7 Troubleshooting 43

8 Transport and environmentally friendly disposal 44
Transport / Emptying the system 44
Disposal 44

9 Technical data 44

10 Index 45

11 JURA contact details / Legal information 47

Symbol description

Warnings	
⚠ WARNING ⚠ CAUTION	Always take note of any information marked with the words CAUTION or WARNING and a warning sign. The signal word **WARNING** draws your attention to potential serious injury, and the signal word **CAUTION** to potential minor injury.
CAUTION	**CAUTION** draws your attention to potential damage to the machine.

Symbols used	
▸	**Prompt to take action.** This symbol means that you are being prompted to perform some action.
ℹ	**Information** and tips to make it even easier to use your JURA.

Control elements

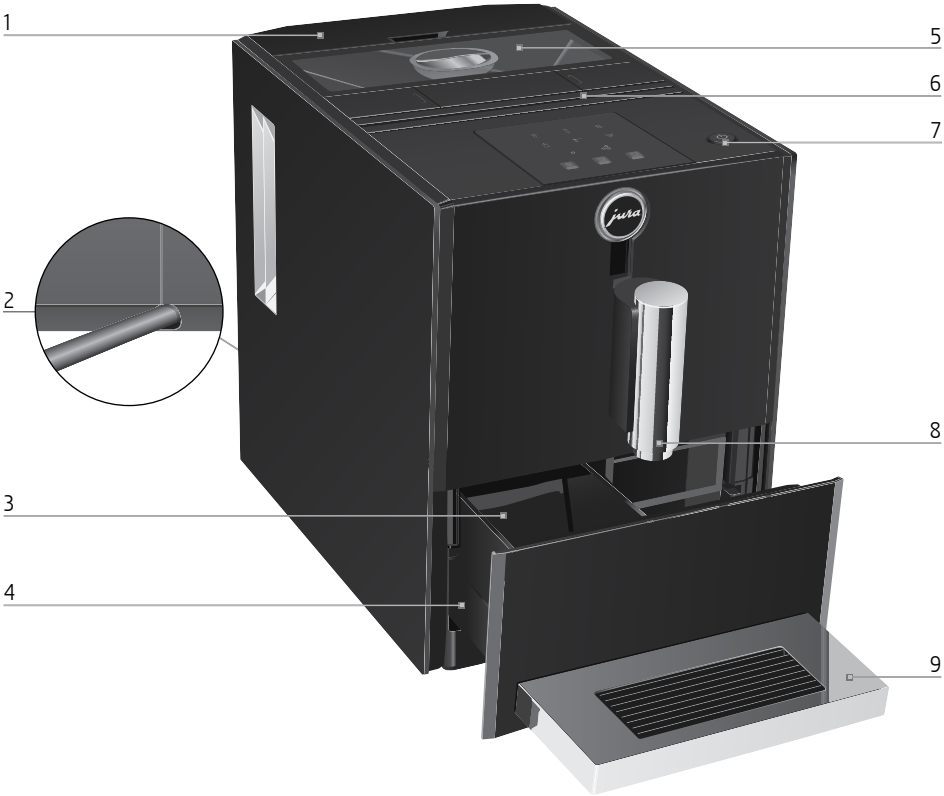

1 Water tank
2 Mains cable (back of the machine)
3 Coffee grounds container
4 Drip tray
5 Bean container with aroma preservation cover
6 Ventilation slots
7 On/Off button
8 Height-adjustable coffee spout
9 Cup grille

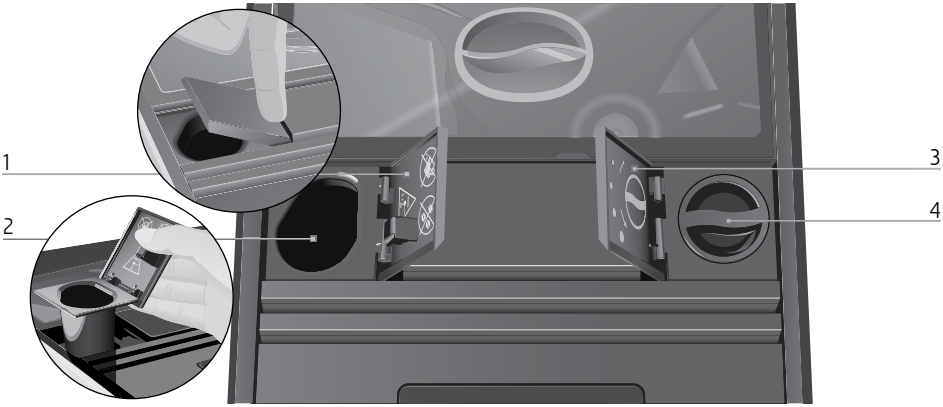

1 Cover for powder chute for ground coffee
2 Powder chute for ground coffee
3 Cover cap for grinder adjustment switch
4 Grinder adjustment switch

1 Symbol display
- Descaling symbol
- Filter symbol
- Cleaning symbol
- Water Tank symbol
- Ground Coffee symbol
- Coffee Grounds Container symbol
- Coffee strength ‘normal’
- Coffee strength ‘strong’
- Ristretto symbol
- Espresso symbol
- Coffee symbol

Important information

Proper use

The machine is designed and intended for private domestic use. It is designed solely for the preparation of coffee. Use for any other purpose will be deemed improper. JURA Elektroapparate AG cannot accept any responsibility for the consequences of improper use.

Before using the machine read these instructions for use thoroughly and completely and comply with the instructions they contain. A warranty service is not applicable for damage or defects caused by non-compliance with the instructions for use. Keep these instructions for use close to the machine and pass them on to the next user.

For your safety

Please carefully read and observe the important safety information set out below.

To avoid danger of potentially fatal electric shock:

- Never use a machine which is damaged or has a defective mains cable.
- In the event of signs of damage, for example if there is a smell of burning, unplug the machine immediately from the mains supply and contact JURA service.
- If the mains cable of this machine is damaged, it must be repaired either directly by JURA or by an authorised JURA service centre.
- Make sure that the JURA and the mains cable are not located close to hot surfaces.
- Be careful to ensure that the mains cable is not trapped and does not rub against sharp edges.
- Never open and repair the machine yourself. Do not modify the machine in any way that is not described in these instructions for use. The machine contains live parts. If opened, there is a danger of potentially fatal injury. Repairs may only be carried out by authorised JURA service centres, using original spare parts and accessories.

A defective machine is not safe and could cause injury or fire. To avoid damage and any associated risk of injury or fire:

- Never allow the mains cable to loosely hang down. The mains cable could pose a tripping hazard or become damaged.

- Protect the JURA from environmental influences such as rain, frost and direct sunlight.
- Do not immerse the JURA, mains cable or connections in water.
- Do not put the JURA or any individual parts in the dishwasher.
- Switch your JURA off before cleaning work with the On/Off button. Always wipe the JURA with a damp cloth rather than a wet one, and protect it from prolonged exposure to water splash.
- Only connect the machine to the mains voltage in accordance with the information on the rating plate. The rating plate is located on the underside of your JURA. Further technical data is provided in these instructions for use (see Chapter 9 'Technical data').
- Please only use original JURA maintenance products. Use of products that are not explicitly recommended by JURA could damage the JURA.
- Do not use any coffee beans treated with additives or caramelised coffee beans.
- Only fill the water tank with fresh, cold water.
- Do not fill the bean container with water.
- Switch the machine off with the On/Off button if you are going to be absent for a longer period of time and remove the mains plug from the power socket.
- Children may not clean or service the machine unless supervised by a responsible person.
- Do not allow children to play with the machine.
- Keep children under the age of 8 away from the machine, or supervise them constantly.
- Children aged 8 and over may only operate the machine without supervision if they have been instructed in how to use it safely. Children must be able to recognise and understand the potential dangers arising from incorrect use.

People, including children, who
- do not have the physical, sensory or mental capabilities to use the machine safely or
- are inexperienced or lack knowledge in how to use the machine safely

must be supervised by a responsible person when using it, or must be instructed in how to use it correctly.

Safety when handling the CLARIS Blue filter cartridge:

- Filter cartridges should be kept out of the reach of children.
- Store filter cartridges in a dry place in the sealed packaging.
- Protect cartridges from heat and direct sunlight.
- Do not use damaged filter cartridges.
- Do not open filter cartridges.

1 Preparing and using for the first time

This chapter provides you with the information you need to use your JURA without any problems. You will prepare your JURA step-by-step to enjoy your first perfect cup of coffee.

ℹ Visit us on the internet. On the **JURA website** (www.jura.com) you will find interesting and up-to-date information on your JURA and every aspect of coffee.

Setting up the machine

When setting up your JURA, please note the following:

- Place the machine on a horizontal surface that is not sensitive to water.
- Choose a spot for your JURA which protects the machine against overheating. Ensure that the ventilation slots are not covered.

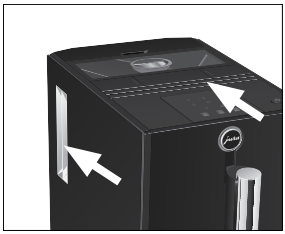

Filling the bean container

CAUTION
Coffee beans which have been treated with additives (e.g. sugar), ground coffee or freeze-dried coffee will damage the grinder.

- ▸ Only use roasted, untreated coffee beans to fill the bean container.

- ▸ Remove the aroma preservation cover of the bean container.
- ▸ Remove any dirt or foreign objects from inside the bean container.

- Fill the bean container with coffee beans.
- Close the bean container.

First-time use

When using the machine for the first time, you can choose whether you want to operate JURA **with** or **without** the CLARIS Blue filter cartridge. If the water hardness is 10 °dH or more, we recommend using the filter cartridge. If you do not know the hardness of your water, you can find this out first (see Chapter 1 'Preparing and using for the first time – Determining the water hardness').

ℹ The On/Off button also acts as a power switch. When the JURA is switched off, the machine does not consume standby energy.

⚠ **WARNING**
If the machine is operated with a defective mains cable, there is a danger of potentially fatal electric shock.

- Never use a machine which is damaged or has a defective mains cable.

Precondition: Bean container is filled.

- Insert the mains plug into a power socket.
- ⏻ Press the On/Off button to switch the machine on.
  The Descaling symbol and the Filter symbol are lit up.

ℹ Now decide whether you want to operate your JURA **with** or **without** a CLARIS Blue filter cartridge.

First-time use with filter cartridge activation

- Touch the Filter symbol.
  The Water Tank symbol lights up.
- Remove the water tank.
- Open the filter holder.
- Insert the filter cartridge into the water tank, exerting slight pressure.

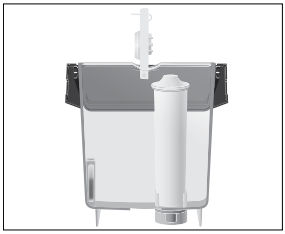

- Close the filter holder. It will click into place audibly.

ℹ After two months, the filter will cease to work. Set the date on the date plate on the filter holder in the water tank.

- Fill the water tank with fresh, cold water and reinsert it.
  The Filter symbol lights up.
- Touch the Filter symbol.
  The , , and symbols flash. The filter is rinsed and the water flows directly into the drip tray.
  Rinsing of the filter stops automatically. The machine heats up.
  The , and symbols flash. The machine is rinsed, water flows out of the coffee spout. The rinse stops automatically. The Coffee Grounds Container symbol lights up.
- Empty the coffee grounds container and drip tray and rinse with warm water.
- Reinsert the coffee grounds container and the drip tray.
  The Ristretto , Espresso and Coffee symbols and the symbol for 'strong' coffee strength light up. Your JURA is ready for use.

First-time use without filter cartridge activation

If you do not want to use the CLARIS Blue filter cartridge, you will need to set the water hardness. The following water hardness settings are available:

Water hardness	Symbol(s) shown in display
Level 1: 1 – 15 °dH	1 symbol illuminated
Level 2: 16 – 23 °dH	2 symbols illuminated
Level 3: 24 – 30 °dH	3 symbols illuminated

- Touch the Descaling symbol.
  The , and symbols light up.
- Touch the , or symbol to set the water hardness, e.g. symbol for 'level 1'.
  The and symbols light up.
- Touch the Descaling symbol.
  The Water Tank symbol lights up.
- Place a receptacle under the coffee spout.
- Remove the water tank.
- Fill the water tank with fresh, cold water and reinsert it.

The , , and symbols flash. The system fills with water and the water flows directly into the drip tray.
The operation stops automatically. The machine heats up.
The , , and symbols flash. The machine is rinsed, water flows out of the coffee spout. The rinse stops automatically. The Ristretto , Espresso and Coffee symbols and the symbol for 'strong' coffee strength light up. Your JURA is ready for use.

Filling the water tank

Daily maintenance of the machine and hygiene when handling coffee and water are key to a perfect coffee result in the cup every time. You should therefore change the water **daily.**

CAUTION
Milk, sparkling mineral water or other liquids can damage the water tank or the machine.
- Only fill the water tank with fresh, cold water.

- Remove the water tank and rinse with cold water.

- Fill the water tank with fresh, cold water and reinsert it.

Determining the water hardness

You can find out what the water hardness is by using the Aquadur® test strip supplied as standard.
- Hold the test strip briefly (for one second) under running water.
- Shake off the water.
- Wait for about one minute.
- You will then be able to read the degree of water hardness from the discolouration of the Aquadur® test strip and the description on the packaging.

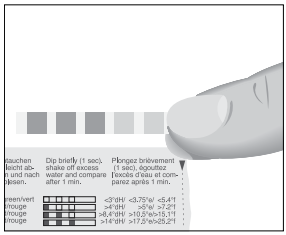

The water hardness can now be set.

en

2 Preparation

ℹ While a speciality coffee is being prepared, you can stop preparation at any time. Simply touch the symbol for the product in question.

ℹ Before and during the grinding operation you can select the **coffee strength** for ristretto, espresso and coffee: 'normal' (), 'strong' ().

The machine always uses the **preset amount of water** for the type of coffee in question. You can change this setting (see Chapter 2 'Preparation – Permanently setting the amount of water for the cup size').

Your JURA features an **energy-saving mode:** Soon after the last preparation, the JURA stops heating up. To indicate that the machine is in energy-saving mode, after about 5 minutes the brightness of all the symbols is reduced. The JURA must heat back up before the next preparation.

Coffee tastes best served hot. A cold porcelain cup cools the beverage – and impairs the taste. We therefore recommend prewarming the cups. The full coffee aroma can develop only in prewarmed cups. You can purchase a JURA cup warmer from your specialised dealer.

Ristretto, espresso and coffee

Ristretto, espresso and coffee are all prepared following this model.

Example: Proceed as follows to prepare one coffee.
Precondition: Your JURA is ready for use.

- Place a cup under the coffee spout.
- Touch the Coffee symbol to start preparation.
  The coffee symbol and coffee strength symbol (or) flash, the preset amount of water flows into the cup.
  Preparation stops automatically. Your JURA is once more ready for use.

Permanently setting the amount of water for the cup size

It is easy to make permanent settings for the amount of water for all speciality coffees according to the cup size. Adjust the amount once as shown in the following example. Every time you prepare a drink in the future, this amount of water will be dispensed.

Example: Permanently adjust the amount of espresso to the cup size.
Precondition: Your JURA is ready for use.

- Place a cup under the dual spout.
- Touch the Espresso symbol **for about 3 seconds** until the Ristretto and coffee symbols appear again.
- **Release** the Espresso symbol.
  The espresso is prepared. The Espresso symbol and coffee strength symbol (or) are flashing.
- Touch the Espresso symbol as soon as there is enough espresso in the cup.
  Preparation stops. The amount of water for one espresso is permanently stored.
  The Espresso symbol and coffee strength symbol (or) flash until the machine is ready for use again.

ℹ You can alter this setting at any time by repeating the above procedure.

Ground coffee

You can choose to use a second coffee variety, for example decaffeinated coffee, with the powder chute for ground coffee.

ℹ Use ground coffee which is not ground too finely. Very fine coffee can block up the system so that the coffee only comes out in drips.

ℹ Never add more than one level measuring spoon of ground coffee.

ℹ The desired speciality coffee must be prepared within approximately one minute after filling with the ground coffee. Otherwise the JURA stops the operation and is once more ready for use.

ℹ If you did not add a sufficient amount of ground coffee, the ☕, ☕, ☕ and symbols flash and the JURA stops the operation.

All speciality coffees with ground coffee are prepared following this model.

Example: Prepare a cup of coffee using ground coffee.

Precondition: Your JURA is ready for use.

- Place a cup under the coffee spout.
- Open the powder chute for ground coffee. The Ground Coffee symbol lights up.
- Place the filler funnel for ground coffee on the powder chute.

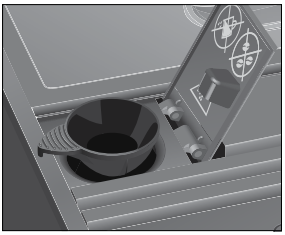

- Place one level measuring spoon of ground coffee into the filler funnel.
- Close the powder chute for ground coffee. The ☕, ☕, ☕ and symbols flash. The ☕, ☕ and ☕ symbols light up.
- ☕ Touch the Coffee symbol to start preparation. The Coffee symbol ☕ flashes, the preset amount of water flows into the cup. Preparation stops automatically. Your JURA is once more ready for use.

Adjusting the grinder

You can adjust the grinder on a continuous scale to suit the degree of roast of your coffee.

CAUTION

If you adjust the consistency of grind when the grinder is not operating, the grinder adjustment switch could be damaged.

- Only adjust the consistency of grind when the grinder is running.

ℹ For a coarser consistency of grind, turn the switch to the left, for a finer grind, turn it to the right.

The consistency of grind is correct if the coffee flows regularly from the coffee spout. In addition a fine, thick crema forms.

Example: Change the consistency of grind **during** the preparation of a ‘strong’ espresso.

- Place a cup under the coffee spout.
- Open the cover of the grinder adjustment switch.

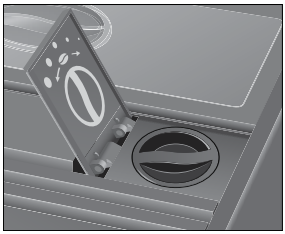

- Touch the symbol for ‘strong’ coffee strength. The ‘strong’ symbol lights up.
- ☕ Touch the Espresso symbol to start preparation.
- Turn the grinder adjustment switch to the desired position **while** the grinder is running. The preset amount of water flows into the cup. Preparation stops automatically.

en

3 Daily operation

Switching on the machine

Daily maintenance of the machine and hygiene when handling coffee and water are key to a perfect coffee result in the cup every time. You should therefore change the water **daily.**

When the machine is switched on, it is automatically rinsed.

- Place a receptacle under the coffee spout.
- Press the On/Off button to switch the machine on.
  The , , and symbols flash, the machine heats up.
  The machine is rinsed, water flows out of the coffee spout. The rinse stops automatically. Your JURA is ready for use.

Daily maintenance

To ensure that you get many years of reliable service out of your JURA and to guarantee the optimum coffee quality, the machine requires daily maintenance.

- Remove the drip tray.
- Empty the coffee grounds container and drip tray and rinse with warm water.

Always empty the coffee grounds container when the machine is switched on. This is the only way of resetting the coffee grounds counter to zero.

- Reinsert the coffee grounds container and the drip tray.
- Rinse the water tank with clean water.
- Wipe the surface of the machine with a clean, soft, damp cloth (e.g. microfibre cloth).

Switching off the machine

When the JURA is switched off, the system is automatically rinsed if a speciality coffee has been prepared.

- Place a receptacle under the coffee spout.
- Press the On/Off button.
  The , and symbols flash. The machine is rinsed, water flows out of the coffee spout.
  The rinse stops automatically. Your JURA is switched off.

When the JURA is switched off with the On/Off button, the machine does **not consume standby energy.**

4 Permanent settings in programming mode

Inserting and activating the filter

Your JURA no longer has to be descaled if you are using the CLARIS Blue filter cartridge. If you did not activate the filter cartridge the first time you used the machine, you can do this now as follows.

Perform the ‘inserting the filter’ operation without any interruptions. This will ensure that your JURA always produces its best.

Precondition: Your JURA is ready for use.

- Touch the and symbols for **approximately 2 seconds.**
  The , , , and symbols light up brightly.
- Touch the Filter symbol for **approximately 2 seconds.**
  The Water Tank symbol lights up.
- Remove the water tank.
- Open the filter holder.
- Insert the filter cartridge into the water tank, exerting slight pressure.

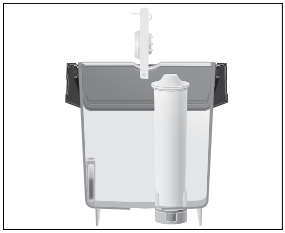

- Close the filter holder. It will click into place audibly.

ℹ After two months, the filter will cease to work. Set the date on the date plate on the filter holder in the water tank.

- Fill the water tank with fresh, cold water and reinsert it.
  The Coffee Grounds Container symbol lights up.
- Empty the drip tray and coffee grounds container and reinsert them.
  The Filter symbol lights up.
- Touch the Filter symbol to start rinsing of the filter
  The , , and symbols flash. The filter is rinsed.
  Rinsing of the filter stops automatically. The Coffee Grounds Container symbol lights up.
- Empty the drip tray and coffee grounds container and reinsert them.
  The , and symbols flash, the machine heats up. Your JURA is once more ready for use.

Setting the water hardness

ℹ If you are using the CLARIS Blue filter cartridge and have activated it, there is no need to set the water hardness.

The harder the water is, the more frequently the JURA needs to be descaled. It is therefore important to set the water hardness accurately.

The following water hardness settings are available:

Water hardness	Symbol(s) shown in display
Level 1: 1 – 15 °dH	1 symbol illuminated
Level 2: 16 – 23 °dH	2 symbols illuminated
Level 3: 24 – 30 °dH	3 symbols illuminated

Example: Change the water hardness setting from ‘level 2’ ( ) to ‘level 3’ ( ).
Precondition: Your JURA is ready for use.

- Touch the and symbols for **approximately 2 seconds.**
  The , , , and symbols light up brightly.
- **Briefly** touch the Descaling symbol.
  The , and symbols light up.
- Touch the Coffee symbol.
  The , , and symbols light up.
- Touch the Descaling symbol to confirm that you want to set the water hardness to ‘level 3’.
  Your JURA is once more ready for use.

Automatic switch-off

You can save energy with the automatic switch-off function on your JURA machine. Your JURA machine switches off automatically after the preset time following the last action on the machine.

You can set the following times:

Switch off after	Symbol(s) shown in display
30 min.	Symbol lights up
1 hr.	Symbol lights up
2 hrs.	Symbol lights up

Example: Change switch-off time from 30 minutes ( ) to 1 hour ( ).
Precondition: The JURA machine is ready for use.

- Touch the and **symbols at the same time for approximately 2 seconds**.
  The symbols , , (or) and and also light up.
- Touch the Espresso symbol.
  The symbol lights up.
- Touch the symbol for **approximately 2 seconds.**
  The switch-off time has been changed to 1 hour. Your JURA machine is once more ready for use.

en

5 Maintenance

Your JURA has the following integrated maintenance programmes:

- Cleaning the machine
- Descaling the machine
- Changing the filter

Cleaning the machine

After 180 preparations or 80 switch-on rinses, the JURA will prompt you to clean it.

CAUTION
If the wrong cleaning agent is used, the machine could be damaged and/or traces could be left behind in the water.

- Use only original JURA maintenance products.

ℹ The cleaning programme lasts approximately 15 minutes.

ℹ Do not interrupt the cleaning programme. The quality of cleaning will be impaired if you do so.

ℹ JURA cleaning tablets are available from specialised dealers.

Precondition: Your JURA is ready for use. The Cleaning symbol lights up.

- Touch the Cleaning symbol for **approximately 2 seconds.**
  The Coffee Grounds Container symbol lights up.
- Empty the drip tray and coffee grounds container and reinsert them.
  The Cleaning symbol lights up.
- Place a receptacle under the coffee spout.
- Touch the Cleaning symbol.
  The , , and symbols flash, water flows out of the coffee spout.
  The operation is interrupted, the Ground Coffee symbol lights up.
- Open the powder chute for ground coffee and drop in a JURA cleaning tablet.

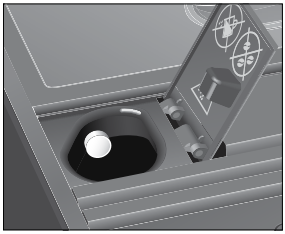

- Close the powder chute for ground coffee.
  The Cleaning symbol lights up.
- Touch the Cleaning symbol.
  The , , and symbols flash, water flows out of the coffee spout several times.
  The operation is interrupted, the Coffee Grounds Container symbol lights up.
- Empty the drip tray and coffee grounds container and reinsert them.
  The , and symbols flash. The machine heats up.
  Your JURA is once more ready for use.

Cleaning the machine without a prompt: You can initiate the 'Cleaning the machine' operation manually at any time as long as the machine is ready for use. Touch the and symbols **at the same time for approximately 2 seconds.**
The , , and or symbols light up brightly.
Continue with the **first prompt** (indicated by ▸) as described in this section.

Descaling the machine

The JURA builds up deposits of limescale over time and automatically prompts you to descale it when necessary. The degree of calcification depends on the hardness of your water.

⚠ **CAUTION**
If the descaling agent comes into contact with the skin or eyes, this can cause irritation.

- Avoid contact with the skin or eyes.
- Rinse off the descaling agent with clean water. Should you get any descaling agent in your eye, see a doctor.

CAUTION
If the wrong descaling agent is used, the machine could be damaged and/or traces could be left behind in the water.

- Use only original JURA maintenance products.

CAUTION
If the descaling operation is interrupted, there may be damage to the machine.

- Allow the descaling programme to run to the end.

CAUTION
If the descaling agent comes into contact with sensitive surfaces (e.g. marble), damage cannot be ruled out.

- Clean up any splashes immediately.

ℹ The descaling programme lasts approximately 40 minutes.

ℹ JURA descaling tablets are available from specialised dealers.

ℹ If you use a CLARIS Blue filter cartridge and this is activated, you will not be prompted to descale.

Precondition: Your JURA is ready for use. The Descaling symbol lights up.

- Touch the Descaling symbol for **approximately 2 seconds.**
  The Coffee Grounds Container symbol lights up.
- Empty the drip tray and coffee grounds container and reinsert them.
  The Water Tank symbol flashes.
- Remove and empty the water tank.
- Completely dissolve the contents of one blister (three JURA descaling tablets) in a receptacle holding 500 ml of water. This may take several minutes.

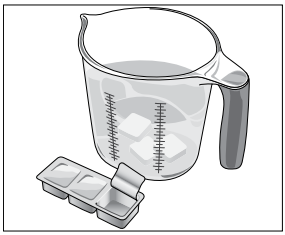

- Pour the solution into the **empty** water tank and reinsert the tank.
  The Descaling symbol lights up.
- Touch the Descaling symbol.
  The , , and symbols flash and water flows directly into the drip tray.
  The operation is interrupted, the Coffee Grounds Container symbol lights up.
- Empty the drip tray and coffee grounds container and reinsert them.
  The Water Tank symbol lights up.
- Remove the water tank and **rinse thoroughly.**
- Fill the water tank with fresh, cold water and reinsert it.
  The Descaling symbol lights up.
- Touch the Descaling symbol.
  The , , and symbols flash and water flows directly into the drip tray.
  The , and symbols flash and water flows out of the coffee spout.
  The operation is interrupted, the Coffee Grounds Container symbol lights up.
- Empty the drip tray and coffee grounds container and reinsert them.
  Your JURA is once more ready for use.

ℹ If the descaling operation stops unexpectedly, rinse the water tank thoroughly.

Descaling the machine without a prompt: You can initiate the 'Descaling the machine' operation manually at any time as long as the machine is ready for use. Touch the and symbols **at the same time for approximately 2 seconds.** The , , and symbols light up brightly. Continue with the **first prompt** (indicated by ▸) as described in this section.

Changing the filter

- After 50 litres of water have flowed through, the filter will cease to work. Your JURA will automatically prompt you to change the filter.
- After two months, the filter will cease to work. Set the date on the date plate on the filter holder in the water tank.
- If the CLARIS Blue filter cartridge is not activated in programming mode, you will not be prompted to change the filter.

Precondition: Your JURA is ready for use. The Filter symbol lights up.

- ▸ Touch the Filter symbol for **approximately 2 seconds.**
  The Water Tank symbol lights up.
- ▸ Remove the water tank.
- ▸ Open the filter holder and remove the old filter cartridge.
- ▸ Insert a new filter cartridge into the water tank, exerting slight pressure.

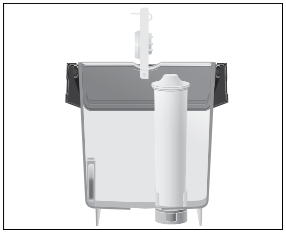

- ▸ Close the filter holder. It will click into place audibly.

- After two months, the filter will cease to work. Set the date on the date plate on the filter holder in the water tank.

- ▸ Fill the water tank with fresh, cold water and reinsert it.
  The Coffee Grounds Container symbol lights up.
- ▸ Empty the drip tray and coffee grounds container and reinsert them.
  The Filter symbol lights up.
- ▸ Touch the Filter symbol to start rinsing of the filter.
  The , , and symbols flash. The filter is rinsed. Water flows directly into the drip tray.
  Rinsing of the filter stops automatically. The Coffee Grounds Container symbol lights up.
- ▸ Empty the drip tray and coffee grounds container and reinsert them.
  The machine heats up. Your JURA is once more ready for use.

Changing the filter without a prompt: If the filter is activated, you can initiate the 'Changing the filter' operation manually at any time as long as the machine is ready for use. Touch the and symbols **at the same time for approximately 2 seconds.** The , , and symbols light up brightly. Continue with the **first prompt** (indicated by ▸) as described in this section.

Descaling the water tank

Limescale deposits may form in the water tank. To ensure correct function of the machine, descale the water tank from time to time.

- ▸ Remove the water tank.
- ▸ If you use a CLARIS Blue filter cartridge, remove it.
- ▸ Descale the tank with a mild conventional descaling agent in accordance with the manufacturer's instructions.
- ▸ Rinse the water tank thoroughly.
- ▸ If you use a CLARIS Blue filter cartridge, reinsert it.
- ▸ Fill the water tank with fresh, cold water and reinsert it.

Cleaning the bean container

Coffee beans may be covered with a slight oil film which remains on the walls of the bean container. These traces may negatively affect the coffee result. For this reason clean the bean container from time to time.

- ▸ Press the On/Off button to switch the machine off.
- ▸ Disconnect the mains plug.
- ▸ Remove the bean container cover.
- ▸ Remove the coffee beans with a vacuum cleaner.
- ▸ Clean the bean container with a soft, dry cloth.
- ▸ Fill the bean container with fresh coffee beans, then close the bean container cover.

6 Messages on symbol display

Message (Symbol(s) shown in display)	Cause/Result	Action
The Water Tank symbol lights up.	The water tank is empty or not correctly inserted. You cannot prepare any products.	▸ Fill the water tank (see Chapter 1 'Preparing and using for the first time – Filling the water tank'). ▸ Insert the water tank.
The Coffee Grounds Container symbol lights up.	The coffee grounds container is full. No speciality coffees can be prepared.	▸ Empty the coffee grounds container and the drip tray (see Chapter 3 'Daily operation – Daily maintenance').
The Coffee Grounds Container symbol flashes.	The drip tray is not inserted correctly or is not inserted at all. You cannot prepare any products.	▸ Insert the drip tray.
The , , , and symbols flash.	The aroma preservation cover for the bean container is not fitted or not fitted correctly.	▸ Fit the aroma preservation cover correctly.
The , , and or symbols light up brightly.	You are in programming mode.	▸ Touch the or symbol to exit programming mode. Your JURA is once more ready for use.
The JURA is ready for use and the Cleaning symbol lights up.	The JURA is prompting you to clean it.	▸ Perform cleaning (see Chapter 5 'Maintenance – Cleaning the machine').

Message (Symbol(s) shown in display)	Cause/Result	Action
The JURA is ready for use and the Descaling symbol lights up.	The JURA is prompting you to descale it.	▸ Perform descaling (see Chapter 5 ‘Maintenance – Descaling the machine ’).
The JURA is ready for use and the Filter symbol lights up.	After 50 litres of water have flowed through the CLARIS Blue filter cartridge, it will cease to work.	▸ Replace the CLARIS Blue filter cartridge (see Chapter 5 ‘Maintenance – Changing the filter’).
Preparing ground coffee: After ground coffee is added to the machine, the , , and symbols flash briefly.	There is insufficient ground coffee in the machine; the JURA stops the operation.	▸ The next time you prepare a beverage, add more ground coffee (see Chapter 2 ‘Preparation – Ground coffee’).

7 Troubleshooting

Problem	Cause/Result	Action
Coffee only comes out in drips when it is being prepared.	Coffee or ground coffee has been ground too finely and is blocking the system.	▸ Set the grinder to a coarser setting or use coarser ground coffee (see Chapter 1 ‘Preparing and using for the first time – Adjusting the grinder’).
The Water Tank symbol lights up even though the tank is full.	The water tank float is trapped.	▸ Descale the water tank (see Chapter 5 ‘Maintenance – Descaling the water tank’).
The and symbols flash alternately.	The system must be filled with water.	▸ Fill the water tank (see Chapter 1 ‘Preparing and using for the first time – Filling the water tank’). ▸ Touch the or symbol. The system fills up with water.
Grinder is making a very loud noise.	There are foreign objects in the grinder.	▸ Contact customer support in your country (see Chapter 11 ‘JURA contact details / Legal information’).
When the JURA is switched on, the Cleaning symbol flashes for 5 seconds. The machine then switches off.	If the machine was exposed to the cold for a long period of time, heating is disabled for safety reasons.	▸ Warm the machine at room temperature.

ℹ If you were unable to solve the problem, contact customer support in your country (see Chapter 11 ‘JURA contact details / Legal information’).

8 Transport and environmentally friendly disposal

Transport / Emptying the system

Keep the packaging for your JURA. It should be used to protect the machine during transport.

In order to protect the JURA from frost during transport, the system must be emptied.

Precondition: Your JURA is ready for use.

- ▸ Place a receptacle under the coffee spout.
- ▸ Touch the and symbols for **approximately 2 seconds.**
  The , , and or symbols light up brightly.
- ▸ Remove and empty the water tank.
  The , and symbols light up.
- ▸ Touch the Espresso symbol
  Hot water will continue to flow until the system is empty.
  The Water Tank symbol lights up.
- ▸ Press the On/Off button to switch the machine off.

Disposal

Please dispose of old machines in an environmentally neutral way.

Old machines contain valuable, recyclable materials which should be recycled. Please therefore dispose of old machines via suitable collection systems.

9 Technical data

Voltage	220 – 240 V ~, 50 Hz
Power	1450 W
Conformity mark	CE
Energy consumption Energy Save Mode ‘on’ (display symbols slightly less bright)	approx. 4.0 Wh
Pump pressure	Static, max. 15 bar
Holding capacity of water tank (without filter)	1.1 l
Holding capacity of bean container	125 g
Holding capacity of coffee grounds container	approx. 9 portions
Cable length	approx. 1.1 m
Weight	approx. 8.9 kg
Dimensions (W × H × D)	23 × 32.3 × 44.5 cm

Information for testers (repeat test in accordance with DIN VDE 0701-0702): The central grounding point (CGP) is located on the underside of the machine, right next to the mains cable’s connection point.

en

10 Index

A
Addresses 47
Aroma preservation cover
  Bean container with aroma preservation cover 28
Automatic switch-off 38

B
Bean container
  Bean container with aroma preservation cover 28
  Cleaning 42
  Filling 32
Bus bar
  Technical data 44
Button
  On/Off button 28

C
Central grounding point 44
CLARIS Blue filter cartridge
  Changing 41
  Inserting and activating the filter 37
Cleaning
  Bean container 42
  Machine 39
Coffee 35
Coffee grounds container 28
Coffee spout
  Height-adjustable coffee spout 28
Consistency of grind
  Adjusting the grinder 36
  Grinder adjustment switch 29
Contact details 47
Cup grille 28
Customer support 47

D
Descaling
  Machine 40
  Water tank 41
Display
  Symbol display 29
Display, messages 42
Disposal 44
Drip tray 28

E
Emptying the system 44
Energy Save Mode 35
Errors
  Troubleshooting 43
Espresso 35

F
Filling
  Bean container 32
  Water tank 34
Filter
  Changing 41
  Inserting and activating the filter 37
First-time use 33
  With filter cartridge activation 33
  Without filter cartridge activation 34

G
Ground coffee 35
  Powder chute for ground coffee 29
Grounding point 44

H
Height-adjustable coffee spout 28
Hotline 47

I
Instant coffee
  Ground coffee 35
Internet 32

J
JURA
  Contact details 47
  Internet 32
  website 32

M
Machine
  Cleaning 39
  Descaling 40
  Setting up 32
  Switching off 37
  Switching on 37
Mains cable 28
Maintenance 39
  Daily maintenance 37
Messages on display 42

P

Permanently setting the water for the cup size 35
Permanent settings in programming mode 37
Powder chute
  Powder chute for ground coffee 29
Preparation 35
  Coffee 35
  Espresso 35
  Ground coffee 35
  Ristretto 35
Problems
  Troubleshooting 43
Programming mode 37
  Automatic switch-off 38
  Setting the water hardness 38
Proper use 30

R

Ristretto 35

S

Safety 30
Safety information 30
Settings
  Permanent settings in programming mode 37
Setting up
  Setting up the machine 32
Switching off 37
Switching on 37
Switch off
  Automatic switch-off 38
Symbol
  Cleaning 29
  Coffee 29
  Coffee Grounds Container 29
  Coffee strength 29
  Descaling 29
  Espresso 29
  Filter 29
  Ground Coffee 29
  Ristretto 29
  Water Tank 29
Symbol description 27
Symbol display 29
  Messages 42

T

Technical data 44
Tel 47
Transport 44
Troubleshooting 43

U

Use, First-time 33

V

Ventilation slots 28

W

Water hardness
  Determining the water hardness 34
  Setting the water hardness 38
Water tank 28
  Descaling 41
  Filling 34
Website 32

en

11 JURA contact details / Legal information

JURA Elektroapparate AG
Kaffeeweltstrasse 10
CH-4626 Niederbuchsiten
Tel. +41 (0)62 38 98 233

@ You will find additional contact details for your country at **www.jura.com.**

Directives
The machine complies with the following directives:
- 2014/35/EU – Low Voltage Directive
- 2014/30/EU – Electromagnetic Compatibility
- 2009/125/EC – Ecodesign Directive
- 2011/65/EU – RoHS Directive

Technical changes
We reserve the right to make technical changes. The diagrams used in these instructions for use are for illustration purposes only and do not represent the original colours of the machine. Some details of your JURA may vary.

Feedback
Your opinion is important to us! Use the contact details at www.jura.com.

Copyright
The instructions for use contain information which is protected by copyright. It is not permitted to photocopy these instructions for use or translate them into another language without the prior written consent of JURA Elektroapparate AG.